HYDAC INTERNATIONAL

HYDAC AutoFilt®
Automatic Filters
Product Overview

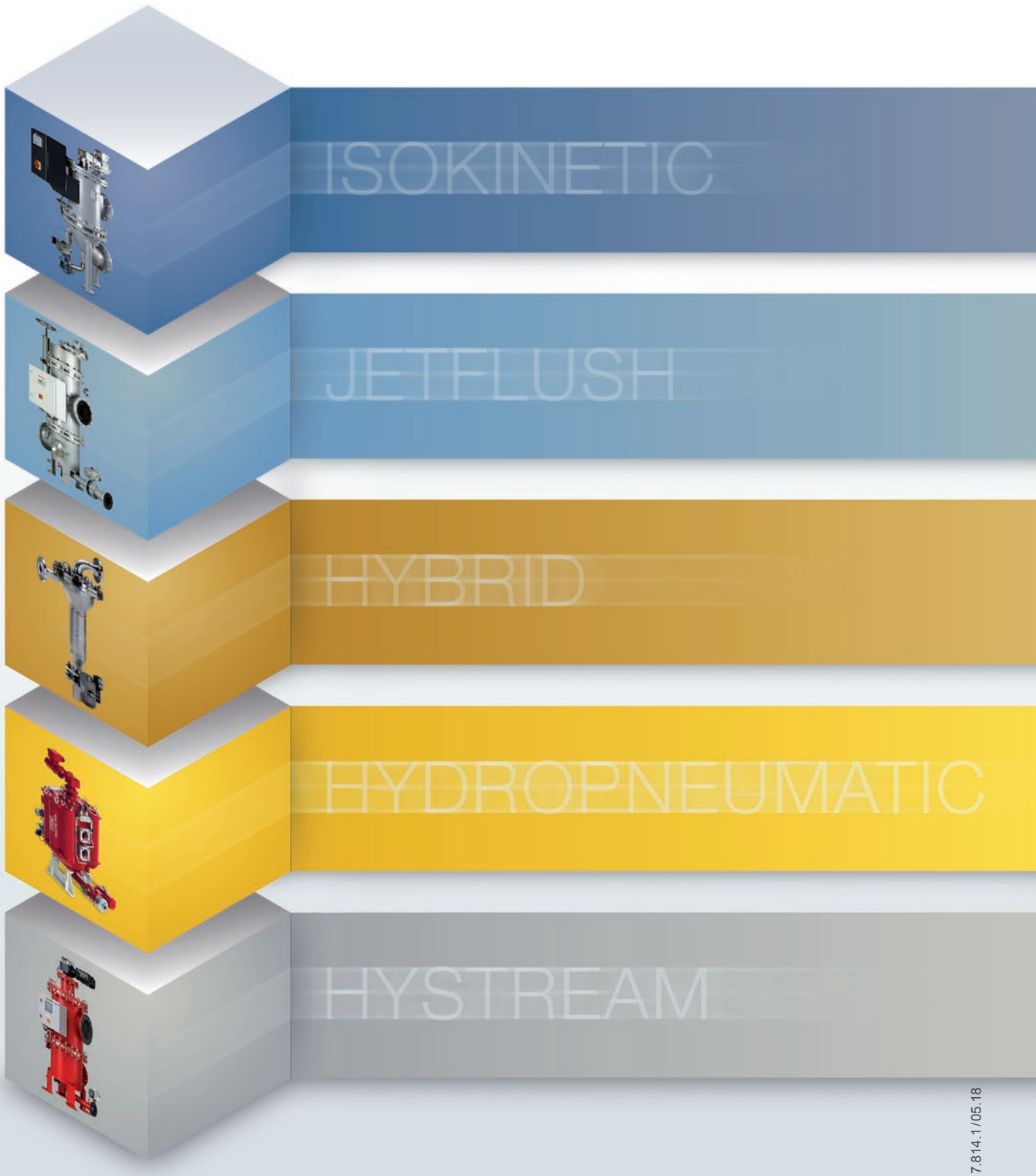

EN 7.814.1/05.18

Your Partner for Expertise in Automatic Filtration

The HYDAC AutoFilt® Concept

Challenge

Particle contamination in process water and other operating fluids accelerates the rate of wear of system components, pipelines and valves. The contamination in these media also has a detrimental effect on the quality of the end products.

In order to protect the operational infrastructure and to guarantee short maintenance times, it is essential to have a filtration system to remove solid particles from operating fluids.

Solution

In process technology the filters of the HYDAC AutoFilt® series have been highly successful. Their flow-optimised design is impressive. Their robust design, specially developed for retrofitting, makes installation in both existing and new systems fast and cost-effective.

Numerous operators of power stations, sewage treatment plants and manufacturing plants have relied on these dependable filters for many years.

Our range of services

- Automatic back-flushing filters for low to high viscosity fluids (water, coolants, heavy fuel oil, etc.)
- Development and improvement of filtration concepts
- Customised models
- System solutions
- Worldwide commissioning, service and maintenance

Note

The information in this brochure relates to the operating conditions and applications described. For applications and operating conditions not described, please contact the relevant technical department.

Subject to technical modifications.

Global yet local: HYDAC Process Technology

HYDAC has been developing and manufacturing self-cleaning automatic filters since the 1980s. As a full-line supplier we offer you a wide variety of automatic filtration solutions.

With over 8,000 employees worldwide, HYDAC is one of the leading suppliers of fluid technology, hydraulic and electronic equipment. More than 50 overseas subsidiaries and over 500 sales and service partners guarantee a competent on-site service – wherever you need our support.

Our wide range of products, combined with our expertise in development, manufacturing, sales and service, allows HYDAC to provide comprehensive filtration concepts – from individual filter components to the complete system.

Benefits of single-source supply

- Solutions for almost all industries and applications (the paper industry, power plants, the automotive and steel industries, oil and gas as well as marine applications, and many more)
- Application-based development, enhancement and state-of-the-art test rig technology
- Fluid analysis and a series of tests are carried out in HYDAC's own research and development centres

Certified quality

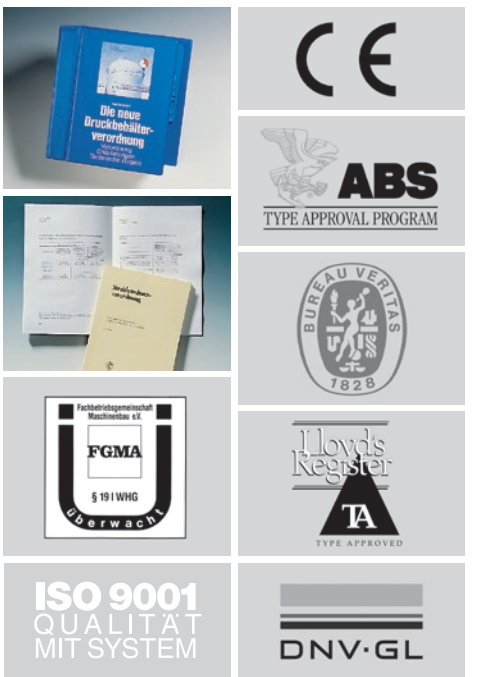

The perfect filtration solution for every requirement

Different requirements call for different filtration concepts and processes. HYDAC offers the perfect solution for every fluid being filtered and for every type and pore size of contamination.

Key features of our automatic filters:

- **Isokinetics**
  (AutoFilt® RF3 / RF4 / RF5 / RF7)
  Filtration with integral pressure cleaning
- **JetFlush**
  (AutoFilt® RF10 / AutoFilt® RF12)
  Technology with hydrodynamic suction effect
- **Hybrid**
  (AutoFilt® ATF TwistFlow Strainer)
  Centrifugal separation with a defined filtration rating
- **Hydropneumatics**
  (AutoFilt® RF9)
  Pressure cleaning with secure media separation
- **HyStream**
  (AutoFilt® RF14)
  Basket filter for fine filtration < 40 µm

Inline filters for every industry and application

HYDAC inline filters provide effective filtration of all types of solid contamination. Numerous designs and filter materials ensure the best fit to the filtration task and the given process conditions.

- Temperatures up to 400 °C
- Pressures up to 1000 bar
- Filtration ratings from 1 µm (absolute) to 10,000 µm
- Flow rates up to 3600 m^3/h

Intelligent Solutions Preserve the Environment

Conservation of resources through the use of automatic filters

Filtration is usually one of the most important steps in multi-stage treatment processes, since it has a crucial impact on the operating efficiency of the main treatment and after-treatment processes further downstream.

Through the use of the automatic filters in the HYDAC AutoFilt® series, system operators and the environment benefit equally from:

- Cleanable filter materials
- Improved service life for system components further downstream
- Lower energy consumption
- Increased process reliability
- Guaranteed quality

Certified environmental management

Quality and environmental management standards DIN EN ISO 9001 and DIN EN ISO 14001 denote first-class quality and a responsible attitude to the environment and resources.

As resources are limited, sustainability is a global challenge. Energy efficiency is an important step towards greater sustainability in stationary and mobile technology.

HYDAC has spent years developing intelligent and energy-efficient product and system solutions to help you make your operations sustainable.

This allows you to save natural and financial resources in the long term.

Using energy efficiently is only one way to increase sustainability. Other important methods are increasing service life and optimising new and existing plants.

Member of German Water Partnership

BLUEcoMPETENCE Alliance Member
Partner of the Engineering Industry Sustainability Initiative

HYDAC AutoFilt® Product
A Guide to the Right Auto

Water		Emulsion
Operating pressure ≥2 bar	Operating pressure < 2 bar	

Overview – matic Filter

Oil & fuel	AutoFilt® pre-selection matrix	
	Isokinetics – Filtration with integral pressure cleaning	**AutoFilt® RF3**
	Q_{max}	7500 m³/h
	Filtration ratings	25 – 3000 µm
	P_{min} / P_{max}	2 bar / 100 bar
	Filter element type	● Slotted tube ● SuperMesh wire mesh, sintered * ● Optional: SuperFlush non-stick coating
	JetFlush – Technology with hydro-dynamic suction effect	**AutoFilt® RF10**
	Q_{max}	3500 m³/h
	Filtration ratings	40 – 3000 µm
	P_{min} / P_{max}	1 bar / 10 bar (standard 6 bar)
	Filter element type	● Slotted tube ● SuperMesh wire mesh, sintere ● Optional: SuperFlush non-stic
	Hybrid – Centrifugal separation with a defined filtration rating	**AutoFilt® ATF TwistFlow Strainer**
	Q_{max}	400 m³/h
	Filtration ratings	Dependent on particle nature
	P_{min} / P_{max}	1 bar / 16 bar
	Filter element type	● Slotted tube ● SuperMesh wire mesh, sintere ● Optional: SuperFlush non-stick coating
	Hydropneumatics - Pressure cleaning with secure media separation	**AutoFilt® RF9**
	Q_{max}	1000 m³/h
	Filtration ratings	1 – 500 µm
	P_{min} / P_{max}	1.5 bar / 16 bar
	Filter element type	● Chemicron® metal fibre ● Wire mesh
	HyStream – special basket filter for fine filtration <40 µm	**AutoFilt® RF14** NEW
	Q_{max}	3000 m³/h
	Filtration ratings	5 – 200 µm
	P_{min} / P_{max}	2 bar / 6 bar
	Filter element type	● Filter basket

AutoFilt® RF4	AutoFilt® RF5	AutoFilt® RF7
New for flow rates up to 385 l/min		
385 l/min	4200 m³/h	7500 m³/h
30 – 1000 µm	200 – 3000 µm	25 – 3000 µm
2 bar / 16 bar	2 bar / 10 bar	2 bar / 16 bar
● Slotted tube ● SuperMesh wire mesh, sintered* ● Optional: SuperFlush non-stick coating	● Slotted tube ● SuperMesh wire mesh, sintered* ● Optional: SuperFlush non-stick coating	● Slotted tube ● SuperMesh wire mesh, sintered* ● Optional: SuperFlush non-stick coating

	AutoFilt® RF12
	80 l/min
	25 – 100 µm
	0.7 bar / 10 bar
ed* k coating	● Slotted tube ● SuperMesh wire mesh, sintered* ● Optional: SuperFlush non-stick coating

ed*

*With or without support structure

Subject to technical modifications.

Selecting the Correct Filter

Nature of the medium being filtered

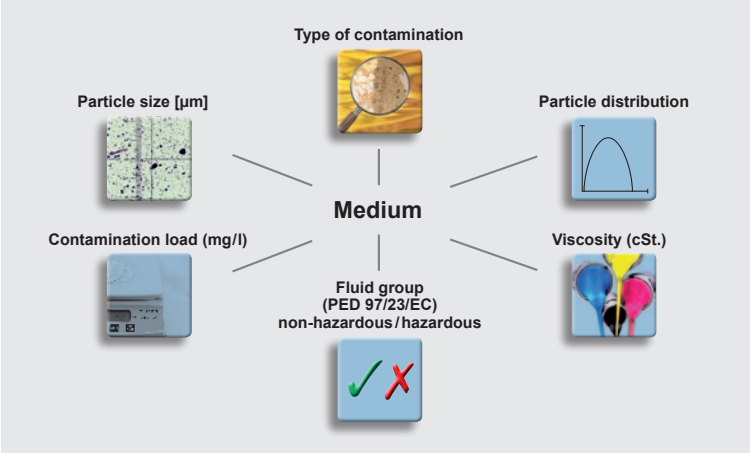

Filter material and filtration rating

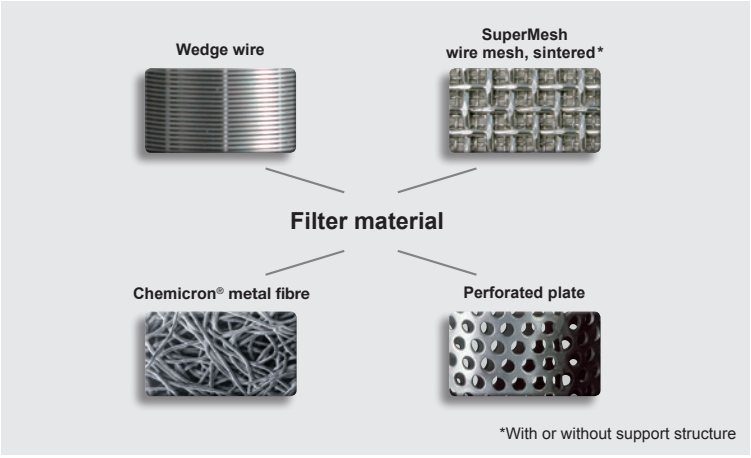

Sizing and design criteria for selecting the filter

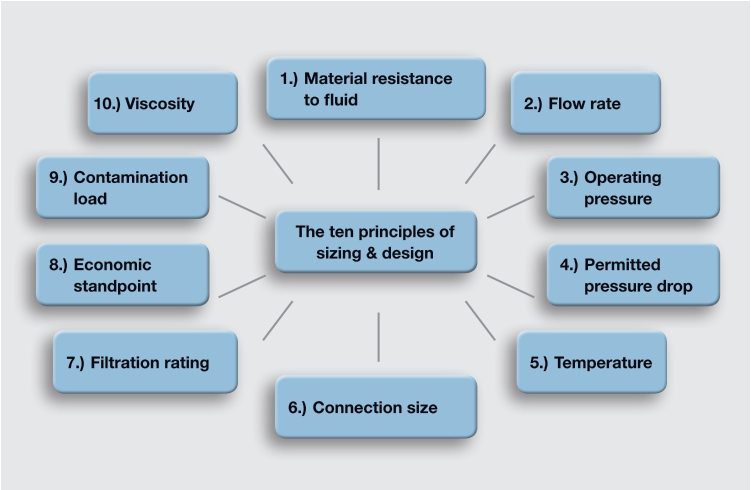

Filter Element Technology: Types and Materials

Quality

The filter elements are the heart of every filter. To a large extent, they determine the performance.

HYDAC filters therefore use only the best filter materials which meet the highest standards in respect of stability, durability and cleanability.

Performance

The automatic back-flushing filters in the HYDAC AutoFilt® series are usually supplied with conical filter elements.

The conical shape and configuration of the filter elements allow consistent flow, resulting in a low pressure drop and complete cleaning of the filter elements.

Advantages:

- Fewer back-flush cycles
- Smaller back-flush volumes
- Lower differential pressure (Δp)

Filter type	AutoFilt® RF3 / RF4 / RF5 / RF7	AutoFilt® RF9
Filter element		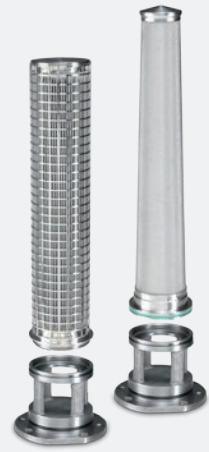
Type	Wedge wire	Chemicron® metal fibre
Filtration rating in µm	50 – 3000	1 – 25
	SuperMesh wire mesh, sintered*	Wire mesh
	25 – 500	10 – 500

*With or without support structure

Cleanability

Our automatic back-flushing filters are supplied exclusively with cleanable filter elements.

Downtimes due to filter element change are eliminated because the filters clean themselves automatically during operation.

This saves natural and financial resources in the long term.

AutoFilt® RF10	AutoFilt® RF12	AutoFilt® ATF	AutoFilt® RF14
			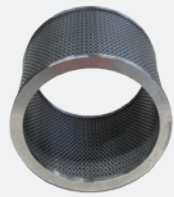
Slotted tube 50 – 3000	Slotted tube 30 – 100	Slotted tube 200 – 3000 Depending on the specific weight, even particles < 100 µm are separated effectively.	Filter basket 5 – 200
SuperMesh wire mesh, sintered* 25 – 100	SuperMesh wire mesh, sintered* 25 – 100	SuperMesh wire mesh, sintered* 500 – 1000 Depending on the specific weight, even particles < 100 µm are separated effectively.	

Subject to technical modifications.

Innovative Structure and Coating

SuperMesh

**Wire mesh, sintered –
With or without support structure**

- Outstanding stability due to sintered element technology
- Highly effective cleaning
- Particles do not build up or lodge between the layers of the filter element
- Reliable filtration rating is guaranteed thanks to sintered filter layers and the uniform pore structure
- With its self-supporting structure, the available filtration area for the HYDAC filter element is up to 40% larger in comparison to conventional wire mesh filter elements with a support layer

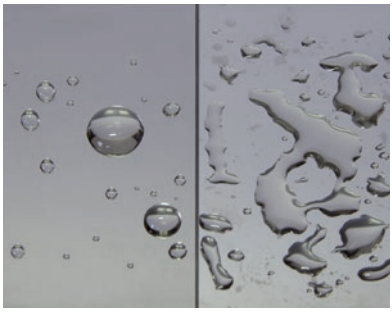

with and without SuperFlush non-stick coating

SuperFlush

**Non-stick coating
for filter elements**

- Available as an option for almost all filter element types in the AutoFilt® series
- Unique coating technology
- Available for conical filter elements
- Recommended for filtration ratings ≤200 µm
- Minimises the adhesion of sticky particles on the filter element surface
- Reduces biofouling
- Increases the interval between two back-flush cycles
- Increases efficiency

Industries and Applications

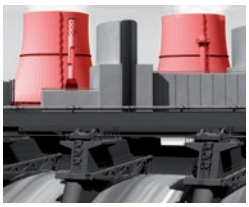

Power plants

- Conditioning of industrial water used to cool generators
- Filtration of sealing water to increase the service life of the turbine shaft floating ring seals in hydropower stations

Steel industry

- Filtration of process water to protect the nozzles and pumps in high pressure descaling
- Water conditioning for cooling blast furnaces and rolling mills
- Emulsion filtration in hot and cold rolling mills
- Filtration of rolling emulsions

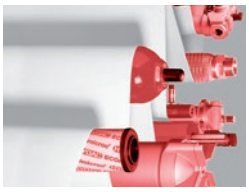

Paper industry

- Protection of all types of nozzles on paper machines
- Treatment of fresh water (e. g. river water) to be used for cooling

Automotive industry

- Filtration of cooling lubricants
- Filtration of washing fluids
- Protection of machine tools

Marine

- Pre-filtration for ballast water treatment systems
- Filtration for flue gas purification systems (scrubber water)
- Filtration of fuels and lubricating oils in diesel engines

Chemical industry

- Cooling water filtration
- Waste water filtration
- Filtration of chemicals

Oil and gas industry

- Filtration of injection water
- Filtration of cooling water
- Filtration of service water
- Filtration of flushing water (pipeline flushing)
- Filtration solution for the subsea sector

Water / waste water treatment

- Protective filters before membrane systems
- Increase in service life
- Conditioning of service water in sewage treatment plants

Mining

- Filtration of water for sprinkler nozzles
- Filtration of water for cutting machines
- Cooling water treatment for mine ventilation

Automatic Filter AutoFilt® RF3

Tried-and-tested operating principle – Variable filter design

In process technology, the automatic back-flushing filter, AutoFilt® RF3 series, has been highly successful. It is used to separate solid particles from low viscosity fluids, and its flow-optimised design is impressive.

Features

- Separation of solid particles from low viscosity fluids
- Conical filter elements provide greater efficiency
- Variable housing design

Advantages

- Fully automatic operation
- Ready-to-operate unit
- Maximum utilisation of the filter area
- Remote monitoring possible with smartphone or tablet
- Self-diagnosis, system diagnosis, process monitoring
- Bidirectional communication of component activity
- Open connectivity to all commonly used customer interfaces (1x Ethernet, 1x serial RS-232 C/RS 485)

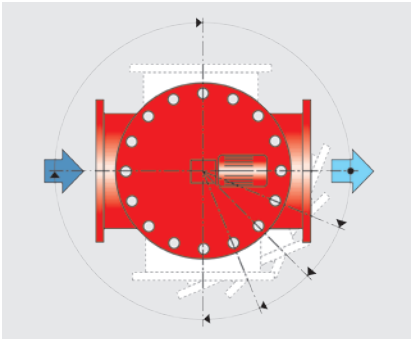

Variable flange positions

Technical specifications	AutoFilt® RF3
Connection sizes	● DN 50 to DN 900
Flow rates	● up to 7500 m³/h
P_{min} / P_{max}	● 2 bar / 100 bar
Max. operating temperature	● 90 °C
Filtration ratings	● 25 to 3000 µm
Filter elements	● Wedge wire ● SuperMesh wire mesh, sintered ● Optional: SuperFlush non-stick coating
Filter housing materials	● Carbon steel ● Stainless steel
Corrosion protection	● 2K epoxy coating ● 2K highly cross-linked polyurethane coating ● Rubber lining
Material of internal parts and filter elements	● Stainless steel
Control parameters	● EPT ● EPU ● EU ● PT ● PTZ ● Manual ● Without control

Isokinetic filtration and back-flushing

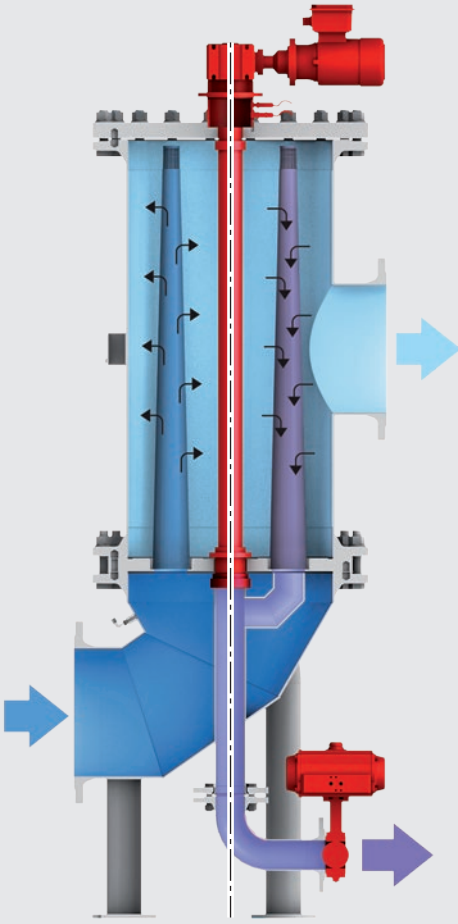

The special conical shape and configuration of the filter elements allow consistent flow, resulting in a low pressure drop and complete cleaning of the filter elements.

- Fewer back-flush cycles
- Lower back-flushing losses
- Lower differential pressure (Δp)

Flow-optimised filter design

The filter was developed using the latest flow simulation methods. The good flow characteristics allow the filter to be compact whilst achieving high filtration performance with low pressure drops.

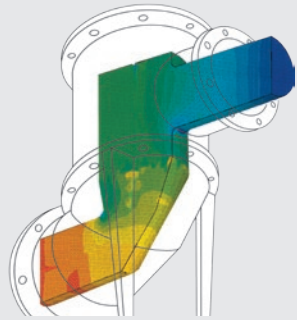

Efficiency of back-flushing

Cylindrical vs. conical filter elements

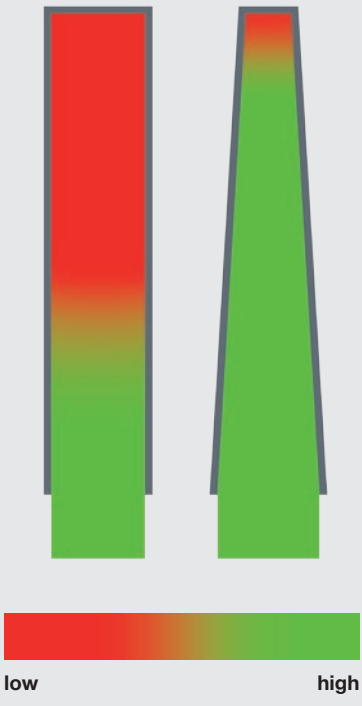

Opening quotient EFQ_X

The filter element opening quotient (EFQ_X) is crucial for consistent flow without back-pressure through the filter element during filtration and back-flushing. The EFQ_x value is the ratio of the open filter area of a filter element to the cross section of the opening of the filter element inlet.

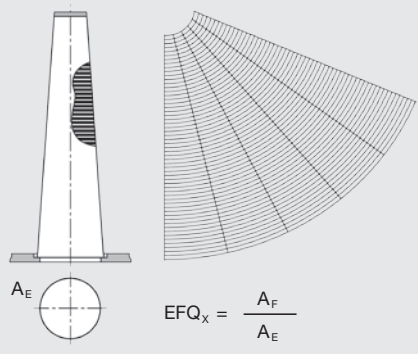

X = filtration rating in µm

Example:
EFQ_{100} <3 for filter elements with filtration rating 100 µm

Control parameters

EPT – Electro-pneumatic cyclic control

The electrically powered gear motor rotates the flushing arm to the filter element or filter elements to be cleaned and stops. The back-flush valve is opened by a pneumatically operated rotary drive and the filter element or elements are cleaned. The pressure drop between filtrate side and back-flush line flushes a small amount of the filtrate back through the contaminated filter elements. The contamination particles collected on the inside of the filter elements are loosened and flushed into the back-flush line via the flushing arm.
After the “back-flushing time per filter element” has elapsed, the back-flush valve is closed. The gear motor then rotates the flushing arm further to the next filter element(s) to be cleaned. The back-flush valve is opened again and the filter element or elements are back-flushed. A full back-flush cycle is complete once all filter elements have been cleaned.

PT – Pneumatic cyclic control

Like EPT but with purely pneumatic components.

PTZ – Pneumatic cyclic control with timer function

Like PT but with the option of setting a maximum filtration time between two back-flush cycles, independently of the differential pressure. The control of the back-flushing filter automatically triggers back-flushing when the maximum filtration time without back-flushing has been exceeded – timer function.

EU – Electrical circulation control

The electrically operated back-flush valve opens. The gear motor continuously rotates the flushing arm underneath the filter elements to be cleaned.
The pressure drop between filtrate side and back-flush line flushes a small amount of the filtrate back through the contaminated filter elements.
The contamination particles collected on the inside of the filter elements are loosened and flushed into the back-flush line via the flushing arm.
When the flushing arm reaches its starting position, the gear motor stops and the electrical back-flush valve closes automatically. The number of cycles can be preset via the control.

EPU – Electro-pneumatic circulation control

Like EU but with the back-flush unit operated pneumatically.

Pulse-aided back-flushing

For the control types EPT and PT, rapid opening of the pneumatic back-flush valve generates a pressure surge (clock pulse) in the filter element openings, and supplements the cleaning effect of the back-flushing process.

Small back-flush volumes due to cyclic control

For the control types EPT and PT, the back-flush valve opens and closes for each filter element.

Filter control AutoFilt® Control Unit ACU

The clear design of the touch screen allows the user to keep an eye on the current operating condition of the filter at all times.
The symbols used in the display are self-explanatory and are based on current international standards and colour codes.
The control is designed to ensure open connectivity to all customer interfaces.

Advantages of the AutoFilt® Control Unit:

- Intuitive menu navigation via touch screen
- Several menu languages to choose from
- Remote monitoring possible with smartphone or tablet
- Self-diagnosis, system diagnosis, process monitoring
- Bidirectional communication of component activity
- Open connectivity to all commonly used customer interfaces (1x Ethernet, 1x serial RS-232 C/RS 485)
- High-precision pressure measurement using HYDAC pressure transmitter HDA
- Additional differential pressure gauge available as an option

Function

Filtration

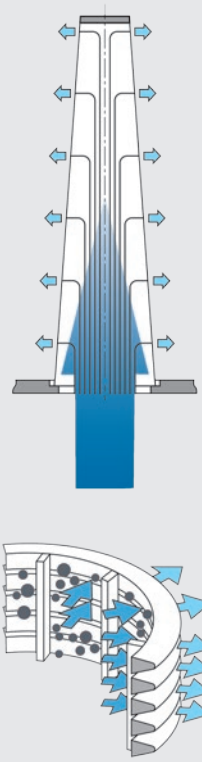

Back-flushing

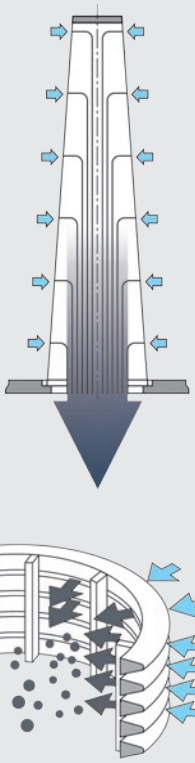

Filtration

- The medium being filtered flows through the filter elements from the inside to the outside
- Contamination particles then collect on the smooth inside of the filter elements
- As the level of contamination increases, the differential pressure between the contaminated and clean sides of the filter increases
- When the differential pressure reaches the pre-set trigger point, back-flushing starts automatically

Automatic back-flushing is triggered:

- When the differential pressure trigger point is exceeded
- By means of set timer function
- By pressing the “Test” button

As soon as back-flushing has been triggered, the back-flushing filter starts to clean the filter elements.

The back-flushing function depends on the selected control type.

Application examples	Areas of application
Power plants	● Conditioning of industrial water used to cool generators ● Filtration of sealing water to increase the service life of the turbine floating ring seals
Steel industry	● Filtration of process water to protect the nozzles and pumps in high pressure descaling ● Water conditioning for cooling blast furnaces and rolling mills ● Emulsion filtration in hot and cold rolling mills ● Filtration of rolling emulsions
Paper industry	● Protection of all types of nozzles on paper machines ● Treatment of fresh water (e.g. river water) to be used for cooling
Automotive industry	● Filtration of cooling lubricants ● Filtration of washing fluids ● Protection of machine tools
Marine	● Pre-filtration of ballast water
Chemical industry	● Cooling water filtration ● Waste water filtration ● Filtration of chemicals
Oil and gas industry	● Filtration of injection water ● Filtration of cooling water ● Filtration of service water ● Filtration of flushing water
Water and waste water treatment	● Protective filters before membrane systems ● Conditioning of service water in sewage treatment plants
Mining	● Filtration of water for sprinkler nozzles ● Filtration of water for cutting machines ● Cooling water treatment for mine ventilation

Automatic Filter AutoFilt® RF4

Self-cleaning automatic back-flushing filter for low flow rates

The AutoFilt® RF4 is a continuously operating, fully automatic and self-cleaning filter for removing particles from low viscosity fluids.

Features

- Separation of solid particles from low viscosity fluids (coolants, water)
- Filtration ratings from 30 to 1000 µm
- Flow rates up to 385 l/min
- Conical filter elements provide greater efficiency

Advantages

- Compact design
- Fully automatic operation
- Ready-to-operate unit
- Maximum utilisation of the filter area
- Remote monitoring possible with smartphone or tablet
- Self-diagnosis, system diagnosis, process monitoring
- Bidirectional communication of component activity
- Open connectivity to all commonly used customer interfaces (1x Ethernet, 1x serial RS-232 C/RS 485)

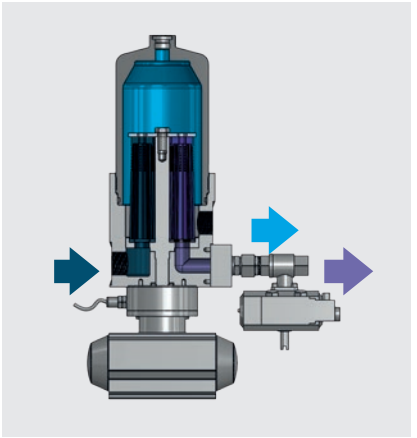

Sectional drawing for AutoFilt® RF4

Technical specifications	AutoFilt® RF4
Connection sizes	● G 1" ● G 1 ½" ● G 2"
Flow rates	● 385 l/min
P_{min} / P_{max}	● 2 bar / 16 bar
Operating temperature	● 80 °C
Filtration ratings	● 30 to 1000 µm
Filter elements	● Slotted tube ● SuperMesh wire mesh, sintered ● Optional: SuperFlush non-stick coating
Filter housing materials	● Aluminium, anodised ● Stainless steel ● Carbon steel, nickel-plated
Corrosion protection	See filter housing materials
Material of internal parts and filter elements	● Internal parts: stainless steel 1.4301 ● Filter elements: stainless steel 1.4435
Control parameters	● Manual ● Electro-pneumatic ● Electrical

Function

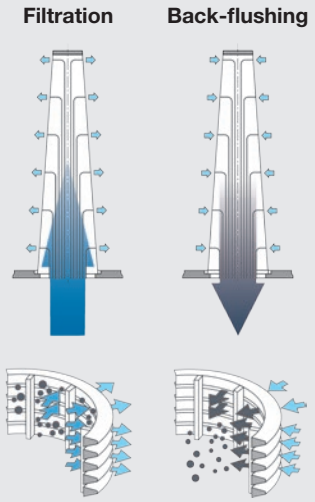

Filtration

- The medium being filtered flows through the filter elements from the inside to the outside
- Contamination particles then collect on the smooth inside of the filter elements
- As the level of contamination increases, the differential pressure between the contaminated and clean sides of the filter increases
- When the differential pressure reaches the pre-set trigger point, back-flushing starts automatically

Triggering back-flushing:

- Automatically: Automatic back-flushing is triggered when the differential pressure trigger point is exceeded
- Manually: When the visual clogging indicator responds

Back-flushing of the filter elements – Back-flush cycle

- The pneumatic drive rotates the filter element mounting plate, including the filter elements, into the correct position, so that a contaminated filter element sits over the flushing opening
- The back-flush valve is opened
- The pressure drop between filtrate side and back-flush line flushes a small amount of the filtrate back through the contaminated filter elements
- The contamination particles collected on the inside of the filter elements are loosened and flushed into the back-flush line via the flushing arm
- After the “back-flushing time per filter element” has elapsed, the back-flush valve is closed
- In this way, all the filter elements are back-flushed, one after the other
- A full back-flush cycle is complete once all filter elements have been cleaned
- On the AutoFilt® RF4 with manual back-flushing, the filter element mounting plate, including the filter elements, is rotated and the back-flush valve is opened by hand

Isokinetic filtration and back-flushing

The special conical shape and configuration of the filter elements allow consistent flow, resulting in a low pressure drop and complete cleaning of the filter elements.

- Fewer back-flush cycles
- Lower back-flushing losses

Small back-flush volumes due to cyclic control

The back-flush valve opens and closes during back-flushing of each filter element.

Pulse-aided back-flushing

The flushing arm remains under the filter element for only a few seconds.
Rapid opening of the pneumatic back-flush valve generates a pressure surge in the filter element openings, and supplements the cleaning effect of the back-flushing process.

Application examples	Areas of application
Automotive industry, machine tools	● Filtration of cooling lubricants and washing fluids ● Cooling channels, pipelines, rotary joints and valves are protected from wear and clogging
Power plants	● Conditioning of industrial water used to cool generators ● Filtration of sealing water to increase the service life of the turbine floating ring seals
Paper industry	● Protection of all types of nozzles on paper machines ● Treatment of fresh water (e.g. river water) to be used for cooling
Water and waste water treatment	● Protective filters before membrane systems ● Conditioning of service water in sewage treatment plants

Automatic Filter AutoFilt® RF5

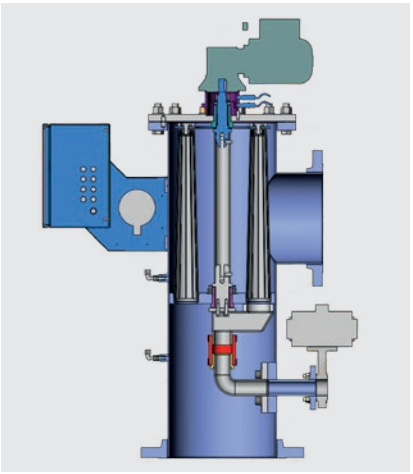

Sectional drawing for AutoFilt® RF5

Self-cleaning automatic back-flushing filter with proven technology and vertical filter inlet

The robust construction and the automatic back-flushing of the AutoFilt® RF5 make a significant contribution to operational reliability and reduce operating and maintenance costs.

Features

- Separation of solid particles from low viscosity fluids (cooling lubricants, water)
- Filtration ratings from 200 to 3000 µm
- Flow rates up to 4200 m^3/h
- Conical filter elements provide greater efficiency
- Vertical filter inlet

Advantages

- Fully automatic operation
- Ready-to-operate unit
- Maximum utilisation of the filter area
- Isokinetic filtration and back-flushing

Technical specifications	AutoFilt® RF5
Connection sizes	● DN 250 to DN 900
Flow rates	● 4200 m^3/h
P_{min} / P_{max}	● 2 bar / 10 bar
Max. operating temperature	● 90 °C
Filtration ratings	● 200 to 3000 µm
Filter elements	● Slotted tube ● SuperMesh wire mesh, sintered ● Optional: SuperFlush non-stick coating
Filter housing materials	● Carbon steel ● Stainless steel
Corrosion protection	● 2K epoxy coating ● 2K highly cross-linked polyurethane coating ● Rubber lining
Material of internal parts and filter elements	● Stainless steel
Control parameters	● EPZ ● EZ ● EPT ● PT ● PTZ

Function

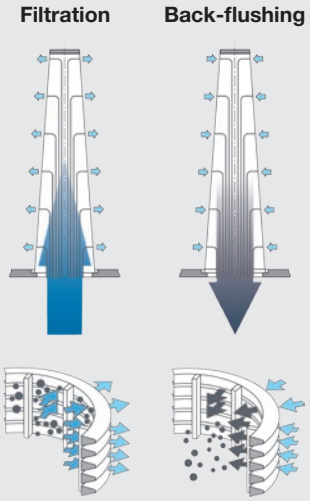

Filtration

- The medium being filtered flows through the filter elements from the inside to the outside
- Contamination particles then collect on the smooth inside of the filter elements
- As the level of contamination increases, the differential pressure between the contaminated and clean sides of the filter increases
- When the differential pressure reaches the pre-set trigger point, back-flushing starts automatically

Automatic back-flushing is triggered:

- When the differential pressure trigger point is exceeded
- By means of set timer function
- By pressing the “Test” button

As soon as back-flushing has been triggered, the back-flushing filter starts to clean the filter elements.

Control parameters

EPZ – Electro-pneumatic cyclic control

- The back-flush valve opens
- The gear motor continuously rotates the flushing arm underneath the filter elements to be cleaned
- The pressure drop between filtrate side and back-flush line flushes a small amount of the filtrate back through the contaminated filter elements
- The contamination particles collected on the inside of the filter elements are loosened and flushed into the back-flush line via the flushing arm
- After the set back-flushing time has elapsed, the gear motor stops and the back-flush valve is closed

PT – Pneumatic cyclic control

- Like EPT but with purely pneumatic components

EZ – Electrical cyclic control

- Like EPZ but with an electrical back-flush valve

EPT – Electro-pneumatic cyclic control

- The gear motor rotates the flushing arm to the filter elements to be cleaned and stops
- The back-flush valve is opened and cleaned due to the pressure drop between filtrate side and back-flush line
- After the back-flushing time per filter element has elapsed, the back-flush valve is closed
- The gear motor rotates the flushing arm further to the next filter element
- A full back-flush cycle is complete once all filter elements have been cleaned

PTZ – Pneumatic cyclic control with timer function

- Like PT but with the option of setting a maximum filtration time between two back-flush cycles, independently of the differential pressure

Application examples	Areas of application
Power plants	● Conditioning of industrial water used to cool generators ● Filtration of sealing water to increase the service life of the turbine floating ring seals
Paper industry	● Protection of all types of nozzles on paper machines ● Treatment of fresh water (e.g. river water) to be used for cooling
Water and waste water treatment	● Protective filters before membrane systems ● Conditioning of service water in sewage treatment plants
Irrigation	● Nozzle protection

Automatic Filter AutoFilt® RF7

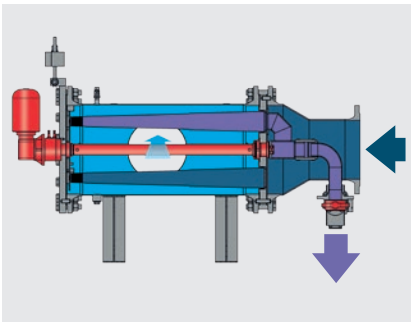

Sectional drawing for AutoFilt® RF7

Self-cleaning automatic back-flushing filter for low installation heights

The AutoFilt® RF7 is used for removing solid particles from low viscosity fluids. It supplements the HYDAC back-flushing filter product range with an additional user-friendly and compact series, which is particularly suitable for use in systems with limited space.

Features

- Space-saving, horizontal design
- Pivoting lid device supplied as standard, for easy access to the inside of the filter
- Separation of solid particles from low viscosity fluids
- Filtration ratings from 25 to 3000 µm
- Flow rates up to 7500 m^3/h
- Conical filter elements provide greater efficiency

Advantages

- Ideally suited to systems with limited space
- Fully automatic operation
- Ready-to-operate unit
- Maximum utilisation of the filter area
- Isokinetic filtration and back-flushing

Technical specifications	AutoFilt® RF7
Connection sizes	● DN 50 to DN 900
Flow rates	● 7500 m^3/h
P_{min} / P_{max}	● 2 bar / 16 bar
Max. operating temperature	● 90 °C
Filtration ratings	● 25 to 3000 µm
Filter elements	● Slotted tube ● SuperMesh wire mesh, sintered ● Optional: SuperFlush non-stick coating
Filter housing materials	● Carbon steel ● Stainless steel
Corrosion protection	● 2K epoxy coating ● 2K highly cross-linked polyurethane coating ● Rubber lining
Material of internal parts and filter elements	● Stainless steel
Control parameters	● EPT ● EU ● PT ● PTZ ● EPU

Function

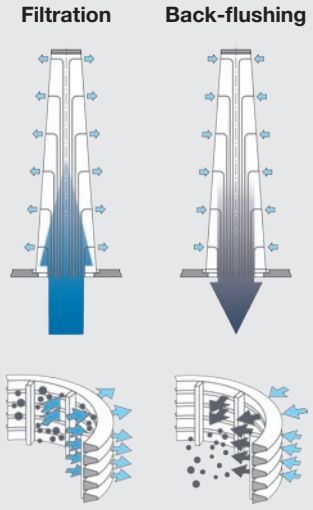

Filtration

- The medium being filtered flows through the filter elements from the inside to the outside
- Contamination particles then collect on the smooth inside of the filter elements
- As the level of contamination increases, the differential pressure between the contaminated and clean sides of the filter increases
- When the differential pressure reaches the pre-set trigger point, back-flushing starts automatically

Automatic back-flushing is triggered:

- When the differential pressure trigger point is exceeded
- By means of set timer function
- By pressing the “Test” button

As soon as back-flushing has been triggered, the back-flushing filter starts to clean the filter elements.

Control parameters

EPT – Electro-pneumatic cyclic control

- The gear motor rotates the flushing arm to the filter elements to be cleaned and stops
- The back-flush valve is opened and cleaned due to the pressure drop between filtrate side and back-flush line
- After the back-flushing time per filter element has elapsed, the back-flush valve is closed
- The gear motor rotates the flushing arm further to the next filter element
- A full back-flush cycle is complete once all filter elements have been cleaned

PT – Pneumatic cyclic control

Like EPT but with purely pneumatic components.

PTZ – Pneumatic cyclic control with timer function

Like PT but with the option of setting a maximum filtration time between two back-flush cycles, independently of the differential pressure.

EU – Electrical circulation control

- The electrical back-flush valve opens
- The gear motor continuously rotates the flushing arm underneath the filter elements to be cleaned
- The pressure drop between filtrate side and back-flush line flushes a small amount of the filtrate back through the contaminated filter elements
- The contamination particles collected on the inside of the filter elements are loosened and flushed into the back-flush line via the flushing arm
- When the flushing arm reaches its starting position, the gear motor stops and the electrical back-flush valve closes automatically

EPU – Electro-pneumatic circulation control

Like EU but with the back-flush unit operated pneumatically.

Application examples	Areas of application
Power plants	● Conditioning of industrial water used to cool generators ● Filtration of sealing water to increase the service life of the turbine floating ring seals
Steel industry	● Filtration of process water to protect the nozzles and pumps in high pressure descaling ● Water conditioning for cooling blast furnaces and rolling mills ● Emulsion filtration in hot and cold rolling mills ● Filtration of rolling emulsions

Automatic Filter AutoFilt® RF10

JetFlush technology – Hydrodynamic suction effect

The new, patented technology used in the HYDAC AutoFilt® RF10 breaks new ground and provides a solution for applications where conventional back-flushing filters have already reached their design limit. The AutoFilt® RF10 is particularly suitable for applications with high dirt loads and surges in contamination.

Features

- Variable filter isometry
- Individual control parameters
- Filtration ratings from 40 µm to 3000 µm
- Electro-pneumatic power supply
- Stainless steel filter elements
- Corrosion protection for carbon steel filter housing: Polyurethane coating

Advantages

- Back-flushing independent of pressure on clean side of filter
- Dependent only on the inlet pressure
- Highly efficient back-flushing with low pressure conditions and long back-flush lines
- With its highly efficient back-flushing, the filter is suitable for high dirt loads and also surges in contamination
- Low maintenance requirements reduce operating costs

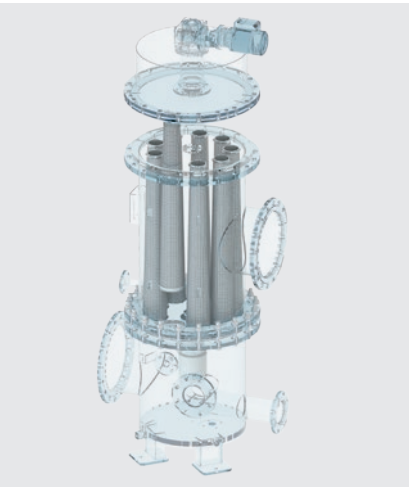

Filter design

Technical specifications	AutoFilt® RF10
Connection sizes	● DN 100 to DN 600
Flow rates	● 3500 m³/h
P_{min} / P_{max}	● 1 bar / 10 bar (standard 6 bar)
Max. operating temperature	● 55 °C
Filtration ratings	● 40 to 3000 µm
Filter elements	● Slotted tube ● SuperMesh wire mesh, sintered ● Optional: SuperFlush non-stick coating
Filter housing materials	● Carbon steel ● Stainless steel
Corrosion protection	● Highly cross-linked polyurethane coating
Material of internal parts and filter elements	● Stainless steel
Control parameters	● EPP = electric motor, pneumatic JetFlush valve, pneumatic butterfly valve

Filtration function

Filtration

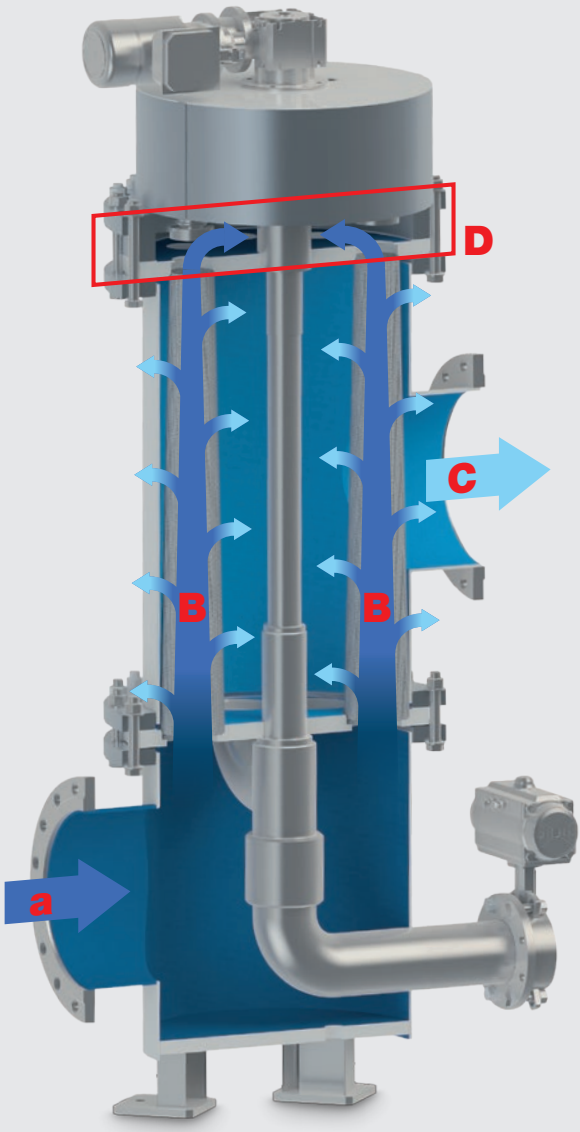

Filtration without interrupting production: Consistent performance and cleanliness

- The medium being filtered enters the filter housing via the filter inlet **A** and flows through the filter elements of the back-flushing filter from the inside to the outside **B** and leaves the filter via the filter outlet **C**
- During the filtration process, the JetFlush reservoir **D** located above the filter elements fills with and stores medium from the contaminated side
- As fluid is filtered, particles collect on the inside of the filter elements
- As the level of contamination increases, the differential pressure between the contaminated and clean sides of the filter increases
- When the differential pressure reaches the pre-set trigger point, back-flushing starts automatically

Triggering back-flushing

Automatic back-flushing is triggered:

- When the differential pressure trigger point is exceeded
- By means of a timer
- By pressing the test button

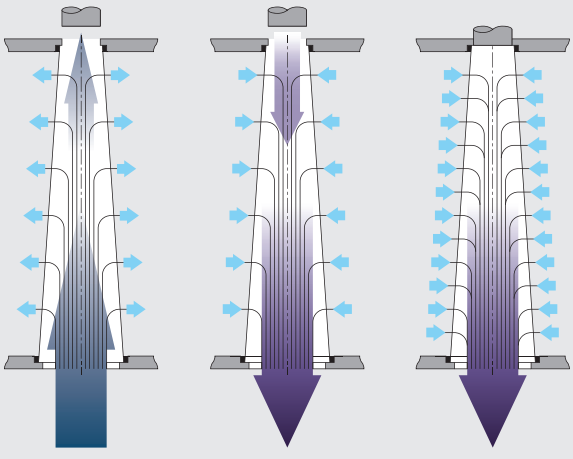

Filtration | Back-flushing Phase 1 | Back-flushing Phase 2

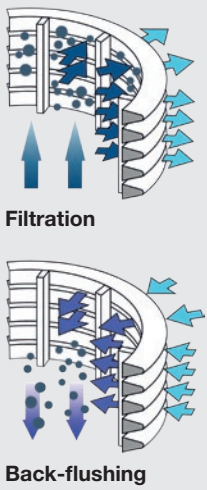

Filtration

Back-flushing

Back-flushing function

Back-flushing – Phase 1

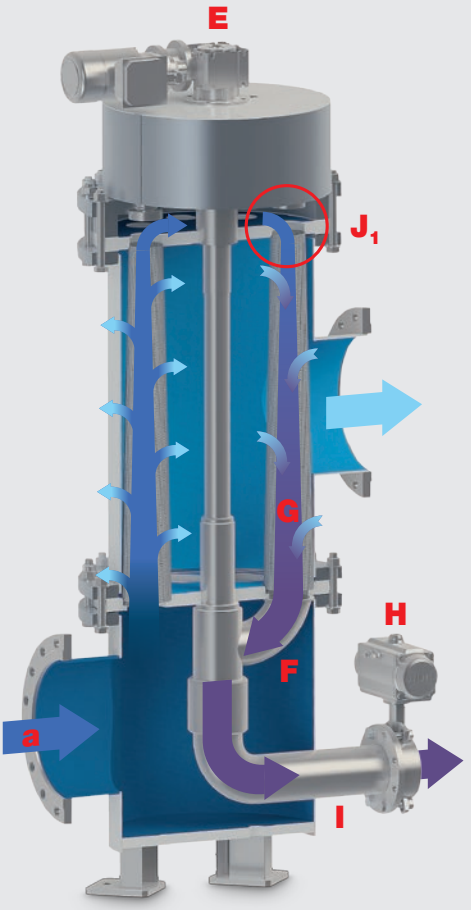

Simultaneously during filtration

Phase 1 of back-flushing – Removing the contamination particles

Back-flushing in general:

- The gear motor **E** rotates the flushing arm **F** to the filter element to be cleaned **G**
- The back-flush valve **H** opens
- The pressure drop between the filter inlet **A** and the back-flush line **I**, combined with the conical geometry of the element, triggers the special JetFlush effect of the AutoFilt® RF10
- The remaining filter elements continue filtering to ensure uninterrupted filtration

Phase 1 of back-flushing – Stripping away the contamination:

- In the first phase, unfiltered fluid from the JetFlush reservoir **J1** above flows into the filter element
- The conical filter element geometry produces a core flow here, supplied mainly by the JetFlush reservoir
- This core flow is supported by the open JetFlush effect which also draws water from the filtrate side into the inside of the filter element

Back-flushing – Phase 2

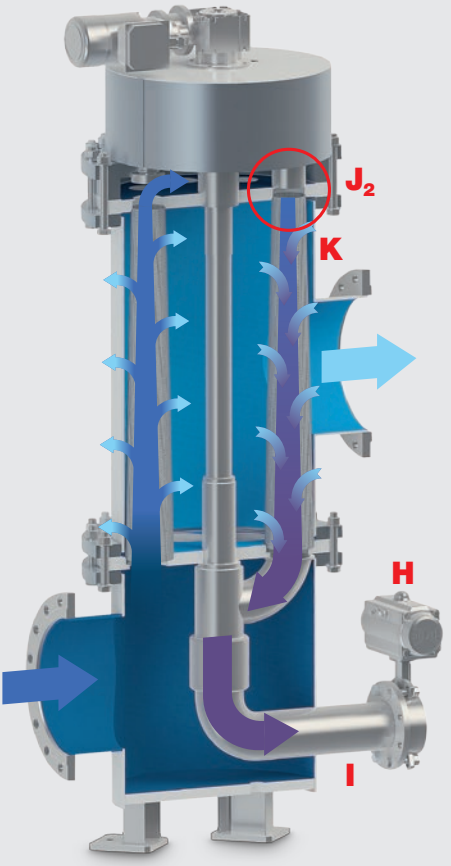

Effective back-flushing without interrupting filtration

Phase 2 of back-flushing – Discharging the contamination

- Once the core flow has developed, the JetFlush reservoir located above the filter element is closed **J2**
- When the opening at the top of the filter element closes, the second phase is initiated, namely discharging the contamination:
  The moving column of fluid draws water from the filtrate side **K** as soon as the fluid supply stops as a result of the filter element closing at the top
- The conical filter element geometry ensures the whole surface of the filter element is now clean and residue-free
- The contamination is discharged via the back-flush line **I**
- After cleaning the filter element, the flushing arm rotates to the next filter element to be cleaned; the process is repeated
- When the back-flush cycle is finished, the back-flush valve is closed **H**

Overview

Maintenance

Low maintenance requirements minimise your operating costs.

The optional cover plate lifting device facilitates access to the filter housing.

Individual control parameters

Control via PLC with LCD display to adjust and read operating parameters, e. g.:

- Differential pressure trigger point
- Initiate “Test” cycle
- Timer
- and much more ...

Variable filter isometry

Greatest flexibility is guaranteed when installing the filter into the system because **the flange position can be adjusted** (inlet / outlet / back-flush line).

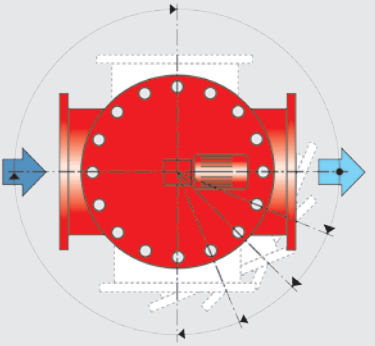

Sacrificial anode

Optional cathodic corrosion protection provided by an easy-to-install **sacrificial anode**.

This protects the internal parts of the filter as well as the filter elements against corrosion, e. g. in seawater applications.

Application examples	Areas of application
Marine	● Pre-filtration of ballast water ● Filtration for flue gas purification systems (scrubber water)
Water and waste water treatment	● Seawater desalination plants
Other applications	● All applications with low operating pressures or more stringent filtration requirements (e. g. for filtration ratings ≤25 µm)

Automatic Filter AutoFilt® RF12

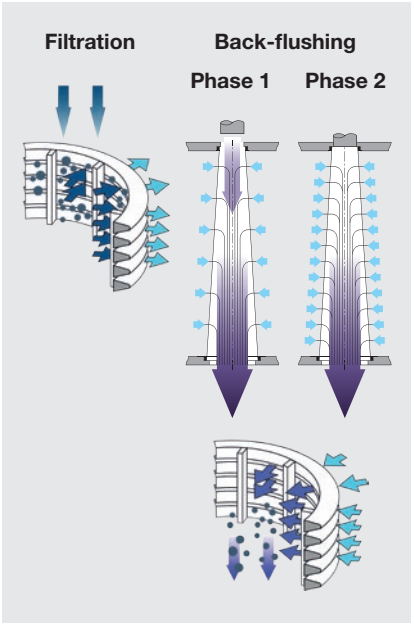

Compact automatic filter with energy-optimised filtration and back-flushing principle – The efficient alternative to cyclone separators

The performance of conventional automatic filters is defined to a large extent by the prevailing differential pressure between the filter outlet and back-flush line.
In contrast to this, the AutoFilt® RF12 is notable for being completely unaffected by this pressure drop.

The AutoFilt® RF12 is impressive due to its highly efficient back-flushing, and is dependent only on the inlet pressure.

Features

- Highly-efficient back-flushing based on conical JetFlush technology
- Dependent only on the inlet pressure, required inlet pressure min. 0.7 bar

Advantages

- Energy-optimised filtration and back-flushing principle
- Not dependent on pressure of filtrate
- Compact design
- Simple design
- Simple integration and flexible adaptation to the machine
- Maintenance-friendly design

Technical specifications	AutoFilt® RF12
Connection sizes	● G 1 ½"
Flow rates	● 80 l/min
P_{min} / P_{max}	● 0.7 bar / 10 bar
Max. operating temperature	● 90 °C
Filtration ratings	● 25 to 100 µm
Filter elements	● Slotted tube ● SuperMesh wire mesh, sintered
Filter housing materials	● Aluminium
Material of internal parts and filter elements	● Internal parts: stainless steel 1.4301 ● Filter elements: stainless steel 1.4435
Control parameters	● Electro-pneumatic

Function

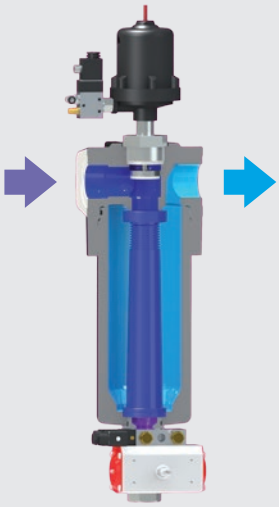

Filtration

- The medium being filtered enters the filter housing via the filter inlet and flows through the filter element from the inside to the outside
- The filtrate leaves the filter via the filter outlet
- As fluid is filtered, particles collect on the inside of the filter element and the differential pressure between the contaminated and clean sides increases

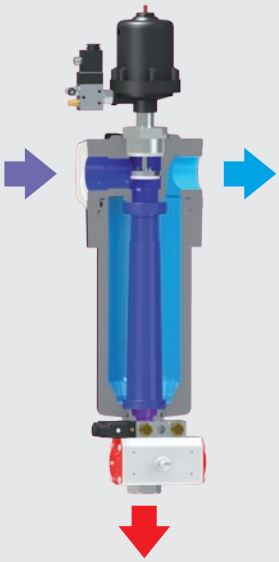

Triggering back-flushing

- After the time pre-set on the timer has elapsed, or by means of an optional differential pressure gauge, back-flushing starts automatically

Phase 1 of back-flushing: Stripping away the contamination

- The back-flush valve opens
- A pressure drop occurs between the filter inlet and the back-flush line
- Unfiltered fluid from the filter inlet above flows into the filter element
- The conical filter element geometry produces a core flow, supplied mainly by the filter inlet
- This core flow is supported by the open JetFlush effect which also draws clean fluid from the filtrate side into the inside of the filter element

Phase 2 of back-flushing: Discharging the contamination

- The JetFlush valve above the filter element is closed
- The moving column of fluid draws clean fluid from the filtrate side as soon as the supply of unfiltered fluid stops as a result of the JetFlush reservoir closing
- The flow of filtrate is interrupted during this phase
- After the JetFlush valve is opened, the contamination is discharged by means of a flow of unfiltered fluid via the back-flush line
- After the back-flush valve is closed, the filter begins filtering again

Application examples	Areas of application
Machine tools	● Filtration of cooling lubricants in low pressure applications

Hybrid Filter
AutoFilt® TwistFlow Strainer ATF

AutoFilt® ATF skid for handling high flow rates

Centrifugal separation with a defined filtration rating – Outstanding performance due to hybrid technology

Through the unique combination which provides the filtration performance of a hydrocyclone and filtration rating of an inline filter, the ATF offers greater process reliability and increased efficiency in one system.

Features

- Suitable for a wide variability in the quality of untreated water
- Copes easily with high contamination loads
- No transfer of contamination to the clean side
- 2-stage operating principle:

  Stage 1: High contamination loads are tackled by the cyclone-like flow and it is this that achieves the filtration performance and efficiency of a centrifugal separator.

  Stage 2: The conical filter element guarantees the filtration rating and prevents transfer of contamination to the clean side – irrespective of fluctuations in the operating conditions and the contamination density.

Advantages

- Consistent filtrate quality
- Continuous filtration – constant self-cleaning
- No rotary parts – easy to service and low maintenance
- Also available as a system solution for higher flow rates

Technical specifications	AutoFilt® ATF
Connection sizes	● G 1" – DN 200
Flow rates	● 400 m³/h
P_{min} / P_{max}	● 1 bar / 16 bar
Max. operating temperature	● 90 °C
Filtration ratings	● Dependent on particle nature and operating conditions
Filter elements	● Slotted tube ● SuperMesh wire mesh, sintered ● Optional: SuperFlush non-stick coating
Filter housing materials	● Carbon steel ● Stainless steel
Corrosion protection	● 2K highly cross-linked polyurethane coating
Material of internal parts and filter elements	● Stainless steel
Control parameters	● Without control ● Manual ● Electro-pneumatic drain valve with or without timer function ● Electrical drain valve with or without timer function

Function

Filtration

- Fluid enters the housing tangentially
- As a result of the tangential inflow and the conical housing cross-section, the fluid flows down in a spiral shape
- Particles with a high density are pressed against the housing wall by the centrifugal forces, and are deposited in the lower section of the housing
- Particles with a low density, which are not deposited below, are separated out by the conical slotted tube filter element with a defined filtration rating

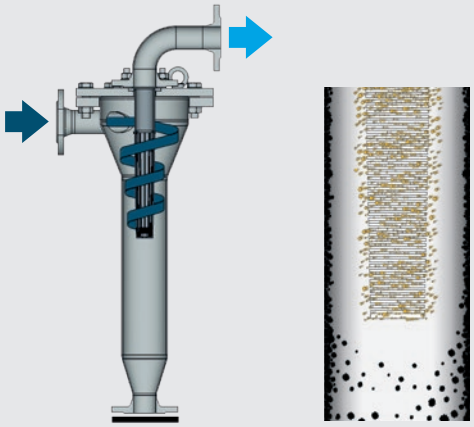

Cleaning

- Deposited particles and those separated by the conical slotted tube filter element collect in the lower section and are removed periodically
- Cleaning is performed by flushing with unfiltered fluid
- Filtration is continuous as only partial flow is used for flushing

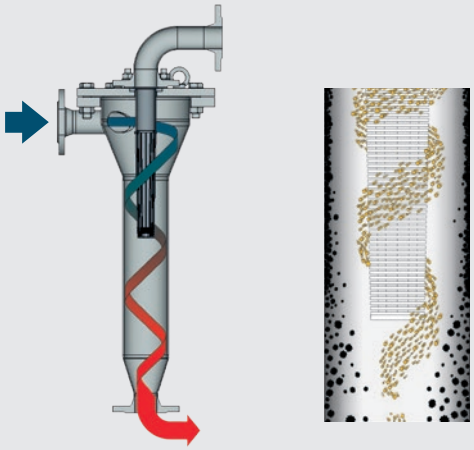

The AutoFilt® TwistFlow Strainer ATF can achieve ratings finer than 200 µm

Depending on the specific weight, even particles <100 µm are separated effectively.
Whereas with conventional hydrocyclones under changed operating conditions there is the risk of contamination reaching the clean side, the conical slotted tube in the ATF performs a protective function (safety filter) with defined filtration ratings and thus prevents contamination reaching the clean side.

Efficiency / Particle size	Specific weight 7.5 g/cm³	Specific weight 2.6 g/cm³	Specific weight 1.7 g/cm³
>100 µm	99 %	98 %	77 %
100 – 75 µm	92 %	84 %	35 %
75 – 50 µm	87 %	78 %	21 %

Application examples	Areas of application
Automotive industry	● Cooling water and waste water filtration
Hydropower stations	● Conditioning of industrial water used to cool generators ● Filtration of sealing water to increase the service life of the turbine shaft floating ring seals
Alpine technology	● Filtration of water to protect snow cannons ● Snow quality assurance
Paper industry	● Protection of spray nozzles for the screens ● Fewer downtimes caused by clogging and wear
Steel industry	● Protection of the nozzles and pumps in high pressure descaling ● Water conditioning for cooling blast furnaces and rolling mills
Sewage treatment plants	● Filtration of a take-off of the clear run to save valuable drinking water or well water ● Filtration of service water
Environmental technology	● Pre-filters before waste water treatment plants

Hydropneumatic Filter AutoFilt® RF9

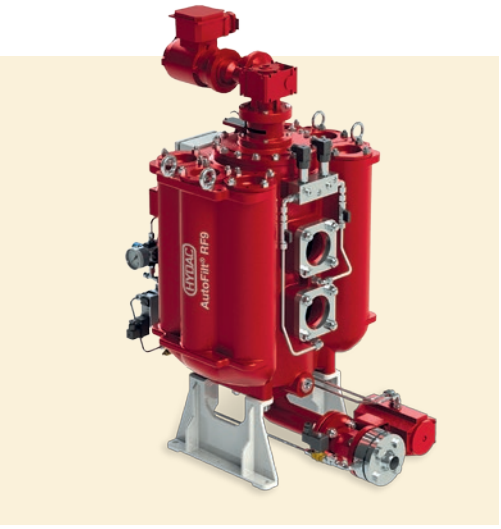

Pneumatic control unit:
Variable adjustment of the back-flushing pressure optimises the back-flushing process

Hydropneumatic back-flushing with secure media separation

This filter is a product of HYDAC's expertise and strong innovative drive, and combines the two disciplines, robust filtration and tried-and-tested piston accumulators. What sets the AutoFilt® RF9 apart is its globally unique, patented hydropneumatic back-flushing technology with secure media separation.

Features

- Back-flushing driven by external medium
- Large filter surface for its compact size
- Low-maintenance, service-friendly design
- Suitable for fuels, cooling lubricants, lubricating oils
- External heater possible
- Optional: bypass filter
- Optional: Sludge Treatment Unit STU for back-flush volume treatment

Advantages

- No mixing with the compressed air
- Adjustable back-flushing intensity
- Efficient hydraulic cleaning
- High cleaning efficiency
- No reduction in pressure during back-flushing
- Low compressed air consumption
- Low pressure drops
- Intelligent control system

Technical specifications	AutoFilt® RF9
Connection sizes	● DN 32 to DN 350
Flow rates	● 1000 m^3/h
P_{min} / P_{max}	● 1.5 bar / 16 bar
Max. operating temperature	● 180 °C
Filtration ratings	● 1 to 500 µm
Filter elements	● Chemicron® metal fibre ● Dutch weave ● Square mesh
Filter housing materials	● EN-GJS-400-15 / DIN EN 1563 / AD-2000 W3/2
Materials	● Internal parts: steel and cast iron ● Filter elements: stainless steel
Control parameters	● Electronic control unit

Filtration function

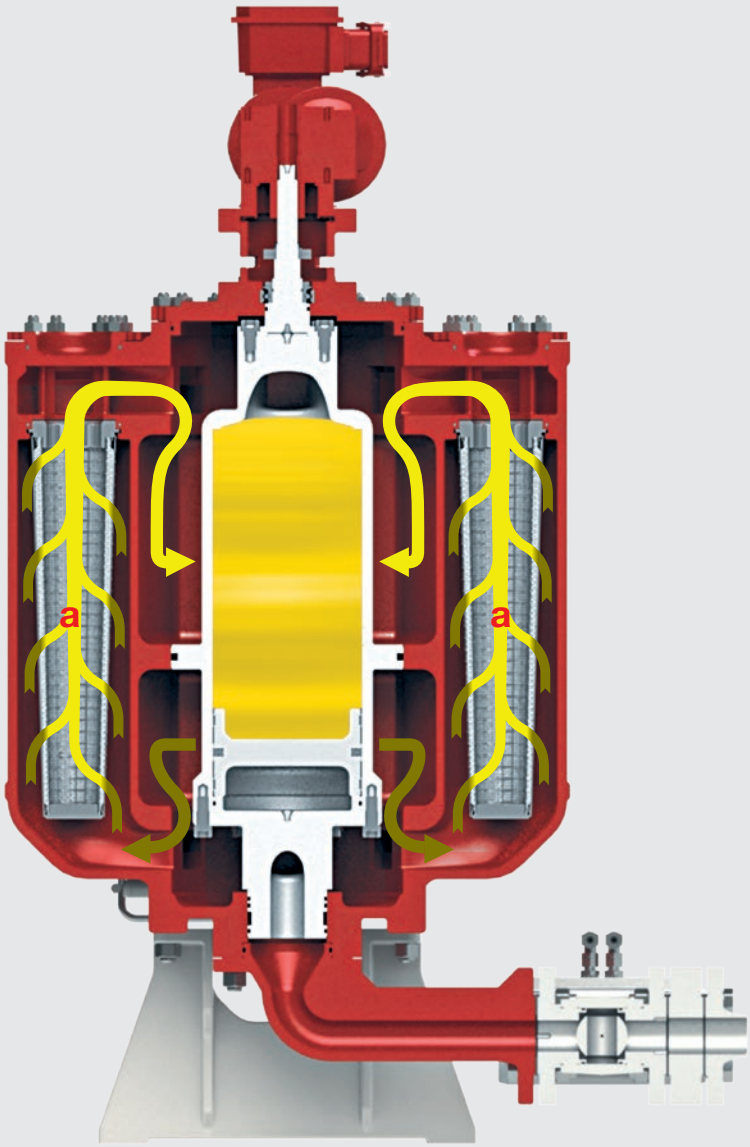

Filtration –
Consistent filtration performance

- The medium enters the filter housing via the inlet and is distributed evenly to the different filter chambers.
  One cleaned filter chamber is always on stand-by.
- The flow direction through the filter elements **A** in the chambers is from the outside to the inside.
  The contamination is separated from the fluid on the outer surface of the filter element and is retained there.
- The cleaned medium leaves the various filter chambers, collects in the upper part of the filter housing and exits the filter through the outlet.
- As the level of contamination in the filter elements increases, the differential pressure in the filter increases.

Filtration

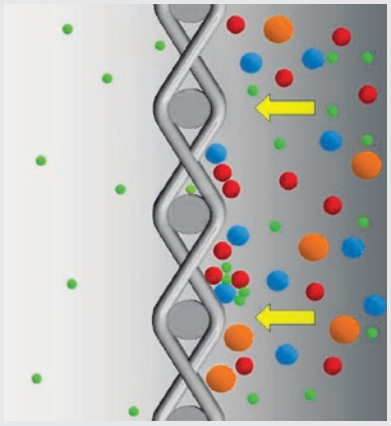

Back-flushing

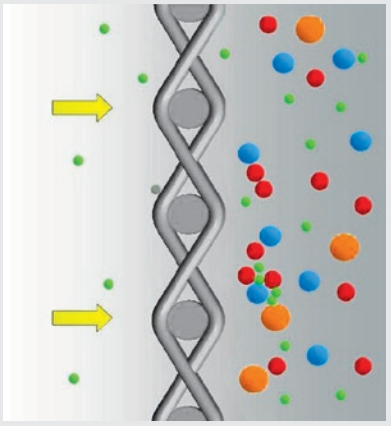

Back-flushing function

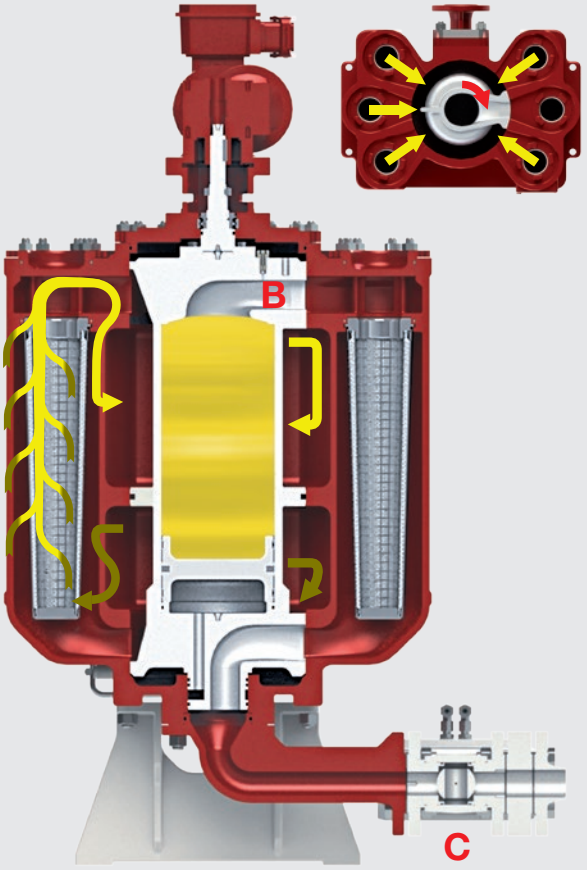

Preparing to back-flush – Without interrupting filtration

- When the differential pressure in the filter reaches the pre-set value, back-flushing is initiated. Back-flushing can also be carried out manually or at set intervals.
- When back-flushing has been initiated, the gear motor turns the back-flushing unit **B** to the next filter chamber.
  As the unit turns, the cleaned filter element is released from stand-by and the differential pressure is re-set.
  A sensor stops the gear motor from turning as soon as the new filter chamber is reached.
- The back-flush valve **C** and the piston accumulator diaphragm valve open simultaneously.

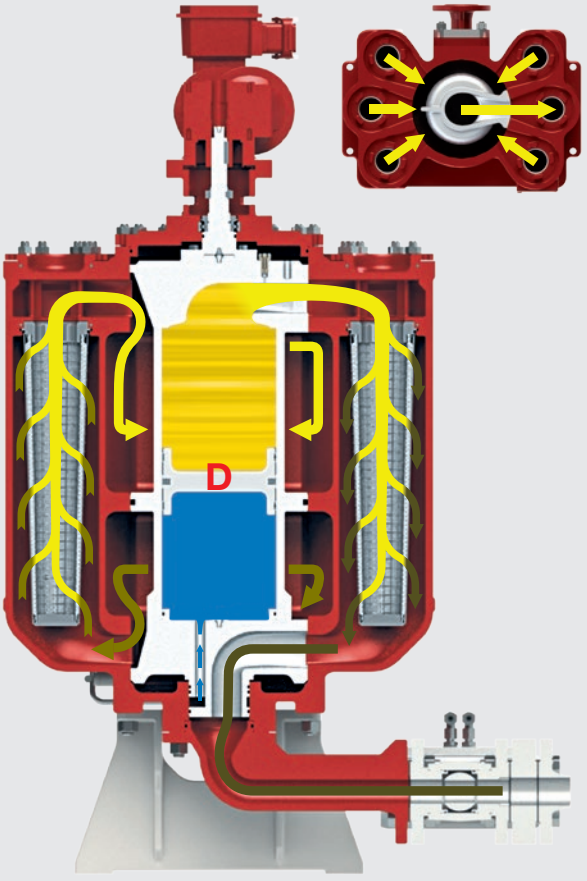

Back-flushing – With excellent efficiency

- The energy stored in the compressed air moves the back-flushing piston **D**, forcing the filtrate to flow in the reverse direction through the filter elements.
  The contaminated particles are detached from the filter material and discharged through the open back-flushing port.
- When the back-flushing piston **D** has reached its end position, both the back-flushing port and piston accumulator diaphragm valve close.
- It takes less than a second to clean the filter element.
- The back-flushing chamber is refilled via the filling bore and the piston returns to its starting position; in other words the accumulator is charged with the filter's own cleaned medium, ready to clean another filter element.

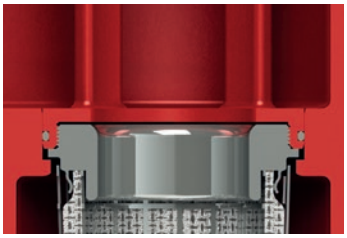

Filter elements are held securely

- Special design to hold filter elements securely prevents the elements from unintentionally working loose or falling out
- User-friendly handling, no tools or torque required
- Changing the element is quick and easy – simply remove the filter cover plate

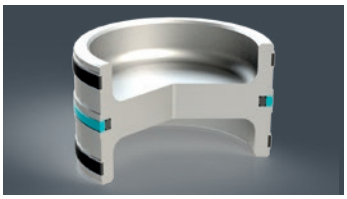

Back-flushing piston

- Guaranteed separation of filtrate and compressed air
- Special H design permits installation in any position

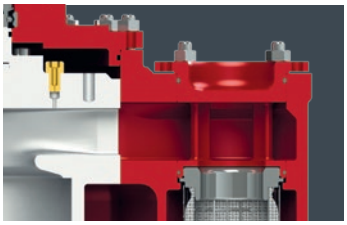

Flushing device

- Maximum flow cross-section, optimised flow dynamics
- Flexible design
- Optimum adaptability for every application due to a specially designed filling bore

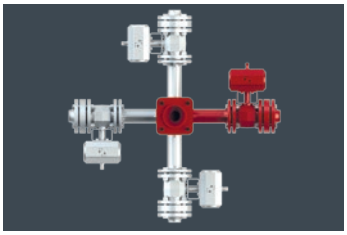

Back-flushing port

- Can be configured to suit installation situation, space-saving positioning

Trace heating (optional)

- Start not dependent on temperature, highly viscous media can be pre-heated
- Choice of heating media

Bypass filter (optional)

- Integrated filtration solution
- Manual bypass filter

Sludge Treatment Unit STU (optional)

- Back-flush treatment

Application examples	Areas of application
Marine & power	● Heavy fuel oil ● Diesel (marine diesel oil) ● Biodiesel ● Lubricating oil
Cooling lubricant	● Fine filtration of cooling lubricants

Automatic Filter AutoFilt® RF14

HyStream technology – Self-cleaning basket filter, specially for filtration <40 µm

For the first time in a HYDAC filter, the technology of the basket-based back-flushing filter has been used in the AutoFilt® RF14 as a supplement to the automatic filter product family.

Features

- Extremely rapid back-flushing
- High cleaning efficiency
- Automatic dirt surge detection
- Variable filter isometry

Advantages

- Low rinsing water loss
- Perfect for filtering larger dirt volumes
- Compact design

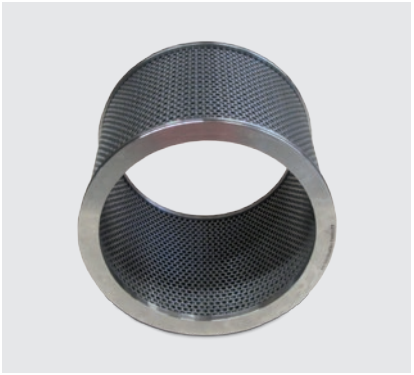

Filter basket

Technical specifications	AutoFilt® RF14
Connection sizes	● DN25 – DN600
Max. flow rate	● 3000 m³/h
P_{min} / P_{max}	● Min. pressure 2 bar / design pressure 6 bar (others on request)
Max. operating temperature	● 55 °C
Filtration ratings	● Filter basket ● 5 – 200 µm
Filter housing materials	● Carbon steel ● Stainless steel
Corrosion protection	● Highly cross-linked polyurethane coating
Materials of internal parts and filter basket	● Stainless steel ● Optional: duplex or similar
Control parameters	● Electro-pneumatic

Function

Filtration

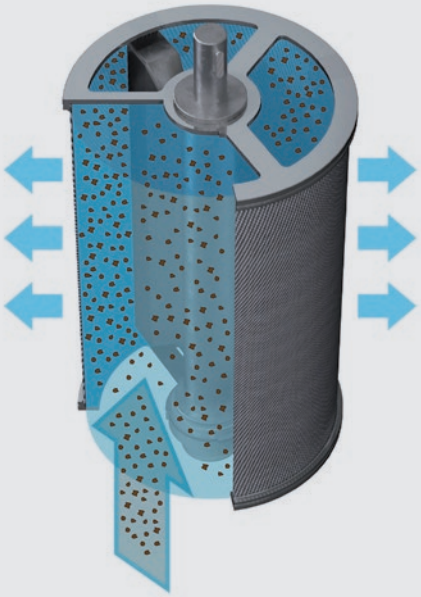

Functional principle

- Filtration from inside to outside through the filter basket
- Particles collect on the smooth inner side of the filter basket
- As the level of contamination increases, the differential pressure between the contaminated and clean sides of the filter increases
- When the pressure drop reaches the pre-set trigger point, filter basket cleaning starts automatically
- If the differential pressure trigger point has been reached, then the gear motor turns past the rinsing unit positioned on the inside of the filter basket

Back-flushing

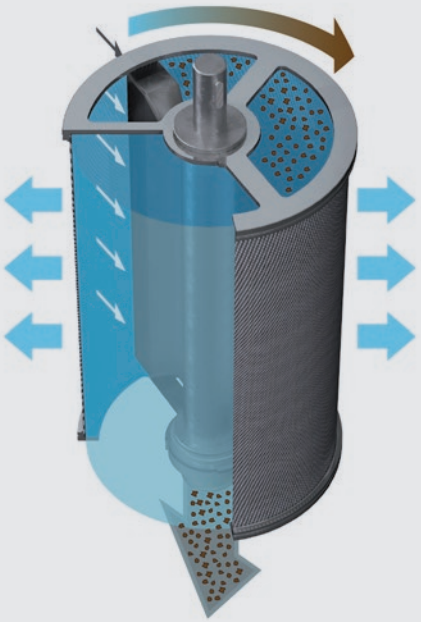

Functional principle

- The pressure drop between the filtrate and back-flush line leads to effective cleaning of the filter mesh.
- A flushing device optimised for flow and adjusted to suit the filter basket provides a particularly effective cleaning of the filter material that manages to overcome the adhesion forces of silt particles, for example, or organisms caught in the ballast water, even in the case of ultrafine filtration.

Application examples	Areas of application
Marine	● Ballast water pre-filtration ● Scrubber water treatment
Oil and gas industry	● Produced water ● Injection water
Industry	● Cooling water treatment
Fish farming	● Water treatment
And many more ...	

Applications / Industries

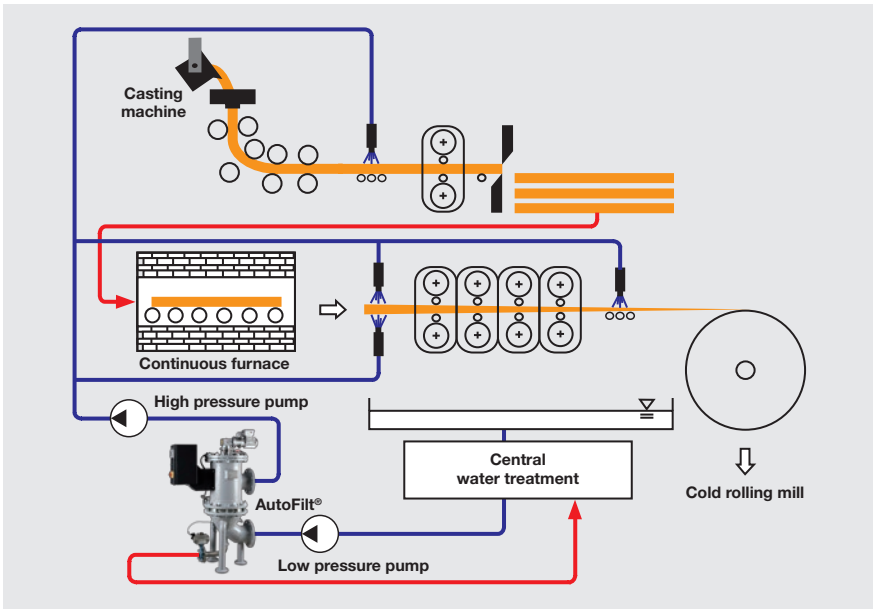

Steel industry / Descaling

- High pressure descaling in rolling mills
- Protection of high pressure pumps and spray nozzles
- Water conditioning for cooling blast furnaces and rolling mills
- Warm water filtration
- Protective filters before felt sprinkling
- Waste water treatment
- Steam generation

HYDAC solutions:

- AutoFilt® RF3 / RF4 / RF5 / RF7
- AutoFilt® TwistFlow Strainer ATF
- Inline and screen basket filters
- Skid and system solutions

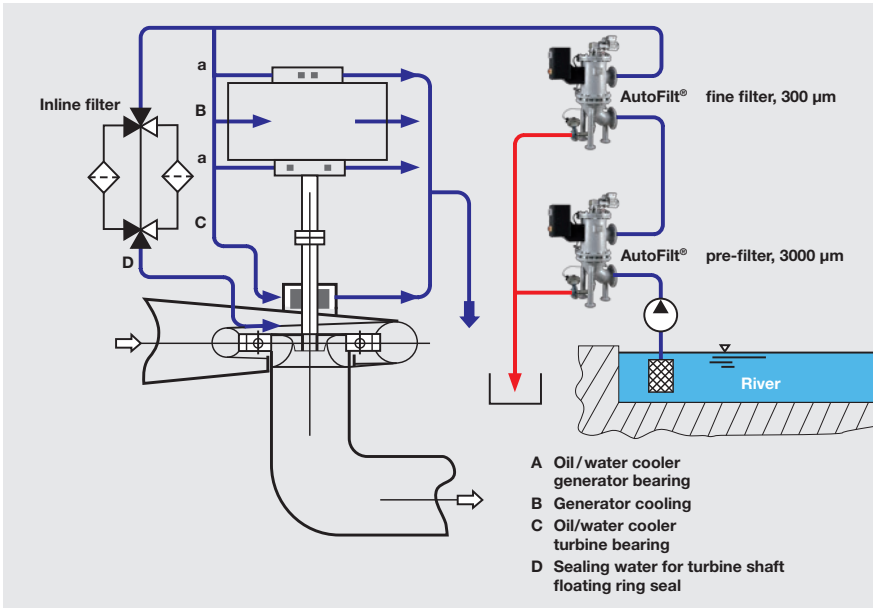

Hydropower stations / Thermal power plants

- Conditioning of industrial water used to cool generators
- Filtration of sealing water to increase the service life of the turbine shaft floating ring seals

HYDAC solutions:

- AutoFilt® RF3 / RF4 / RF5 / RF7 / RFH
- AutoFilt® TwistFlow Strainer ATF
- Inline and screen basket filters
- Skid and system solutions

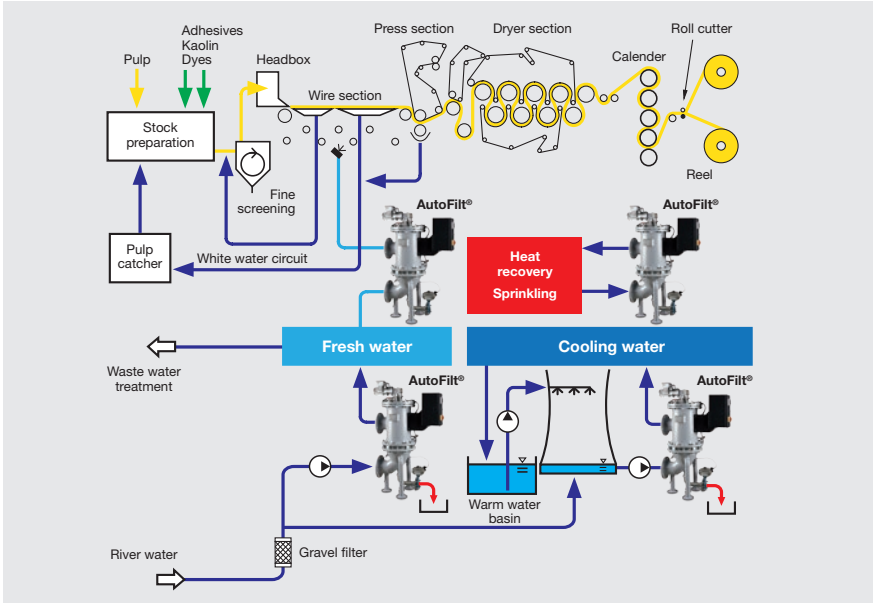

Paper manufacture

- Fresh water treatment
- Cooling water treatment
- Sealing water treatment
- Warm water filtration
- Protective filters before felt sprinkling
- Waste water treatment
- Steam generation

HYDAC solutions:

- AutoFilt® RF3 / RF4 / RF5 / RF7
- AutoFilt® TwistFlow Strainer ATF
- Inline and screen basket filters
- Skid and system solutions

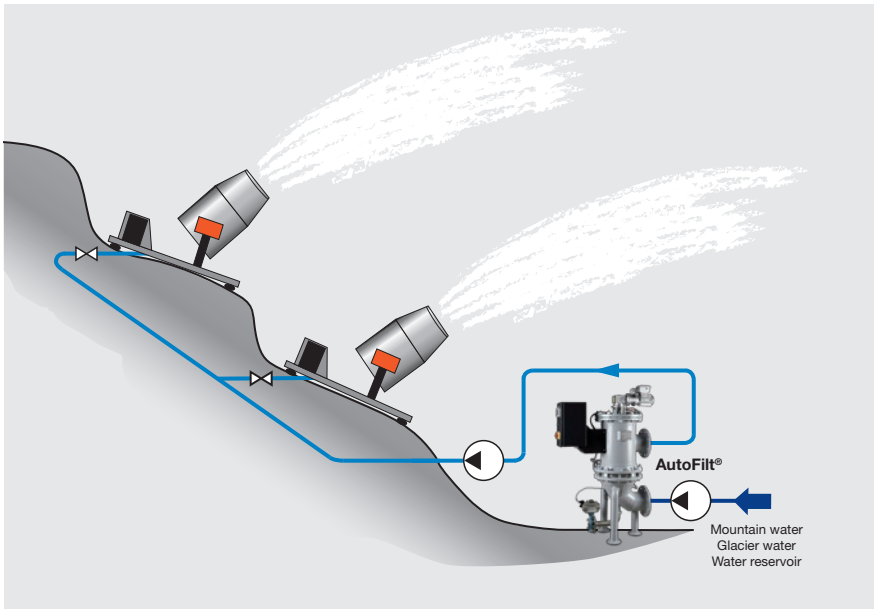

Artificial snow

- Contamination in the water (sand, glacial sediment, etc.) causes damage to the snow cannon nozzles and reduces snow quality

HYDAC solutions:

- AutoFilt® RF3 / RF4 / RF5 / RF7
- AutoFilt® TwistFlow Strainer ATF
- Inline and screen basket filters
- Skid and system solutions

Water filtration – work areas and filtration ratings

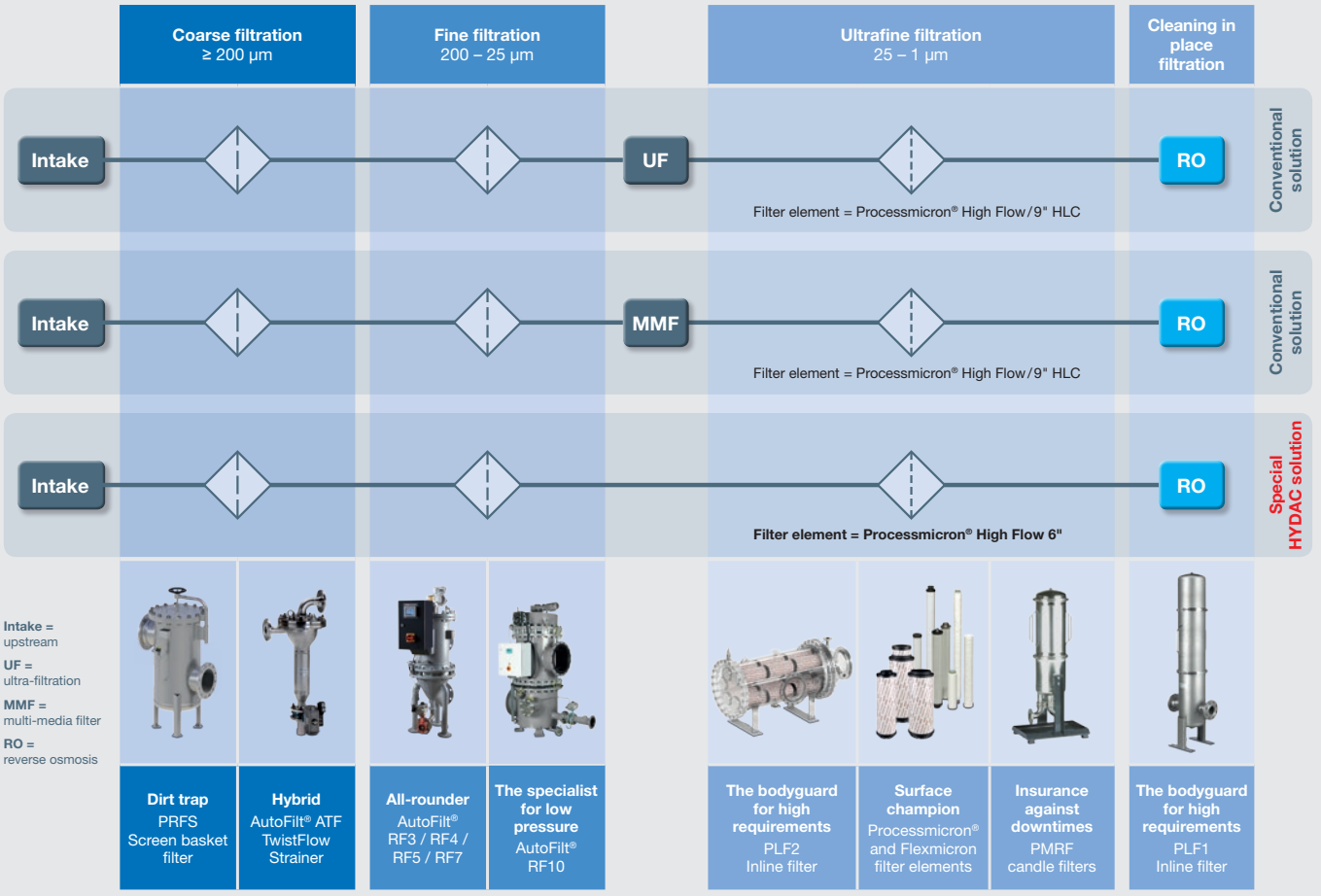

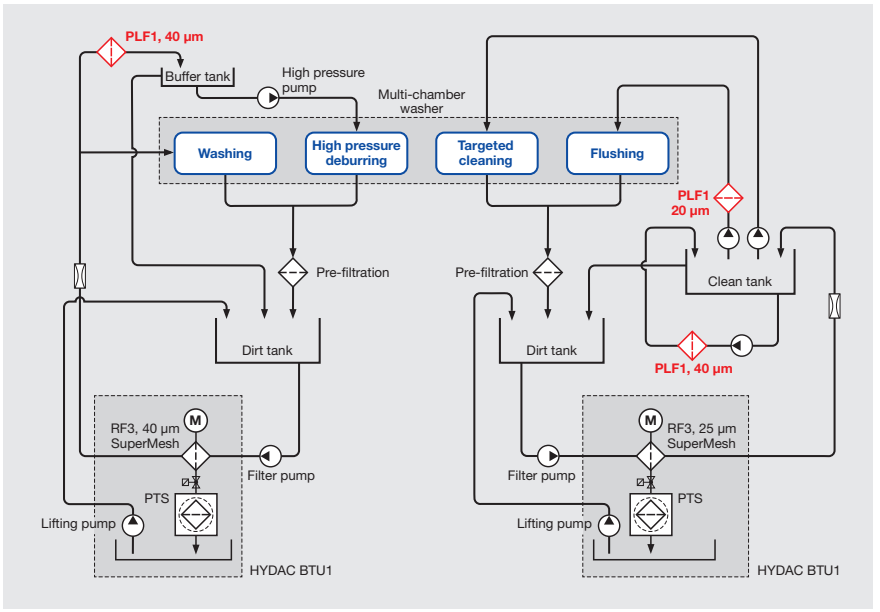

Industrial part washers

- Fresh water treatment
- Treatment of washing fluids

HYDAC solutions:

- AutoFilt® RF3 / RF4 / RF5 / RF7
- AutoFilt® TwistFlow Strainer ATF
- Process Inline Filter PLF1
- BTU Back-Flush Treatment Unit

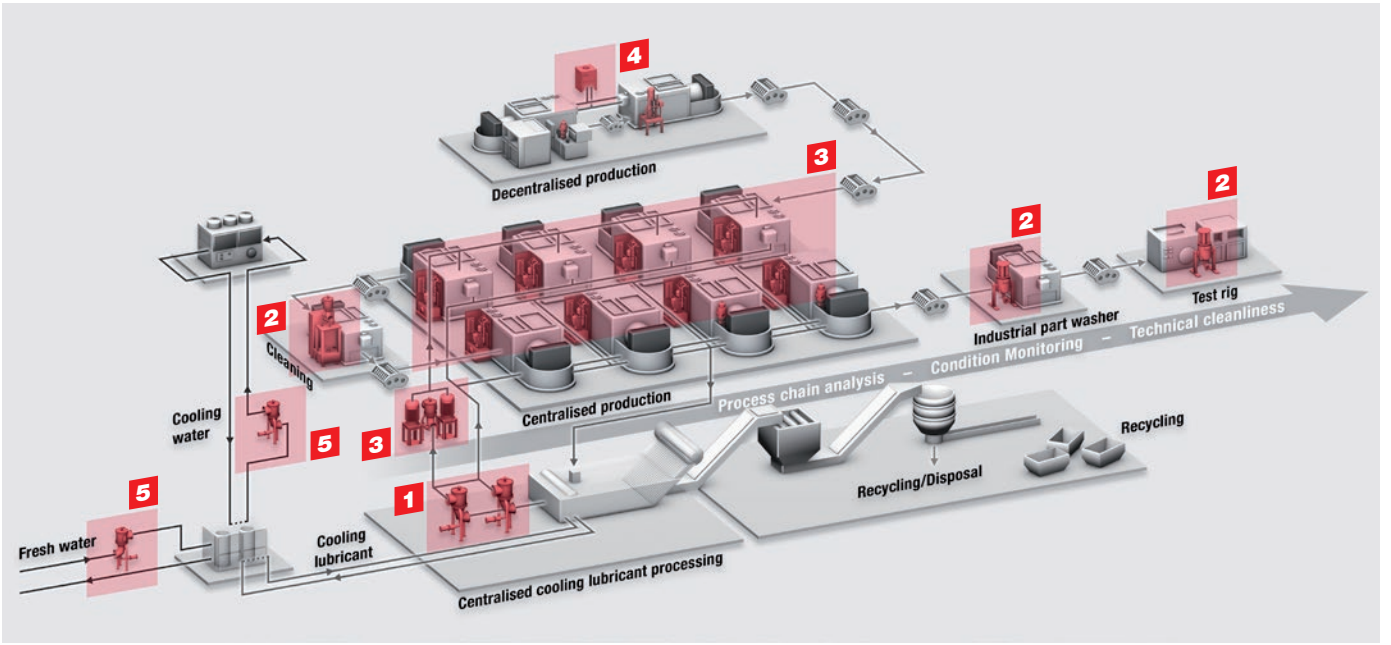

Automotive industry

1. Secondary filtration of centralised cooling lubricant systems
2. Filtration of industrial part washers and test rigs
3. Protective filtration of high pressure cooling lubricant circuits
4. Secondary filtration of decentralised cooling lubricant systems
5. Filtration of process and cooling water

HYDAC solutions:

- AutoFilt® RF3 / RF4 / RF7 / RF9 / RF12
- Process Booster Block PBB
- BTU Back-Flush Treatment Unit
- Process Inline Filter PLF1

Fuel

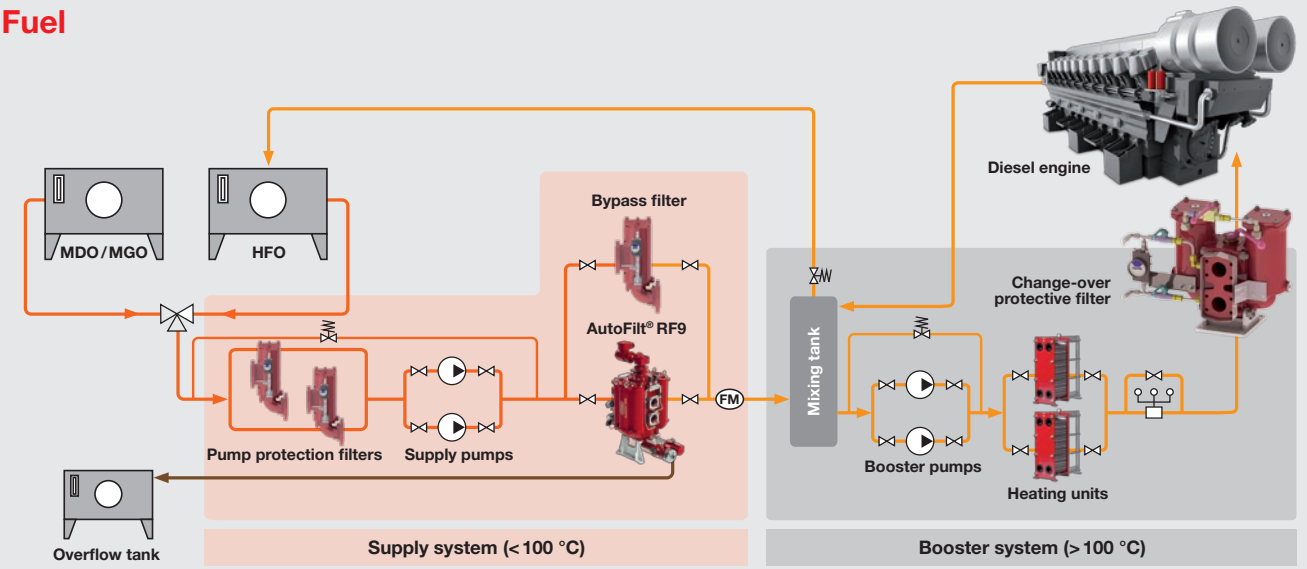

Lubricating oil

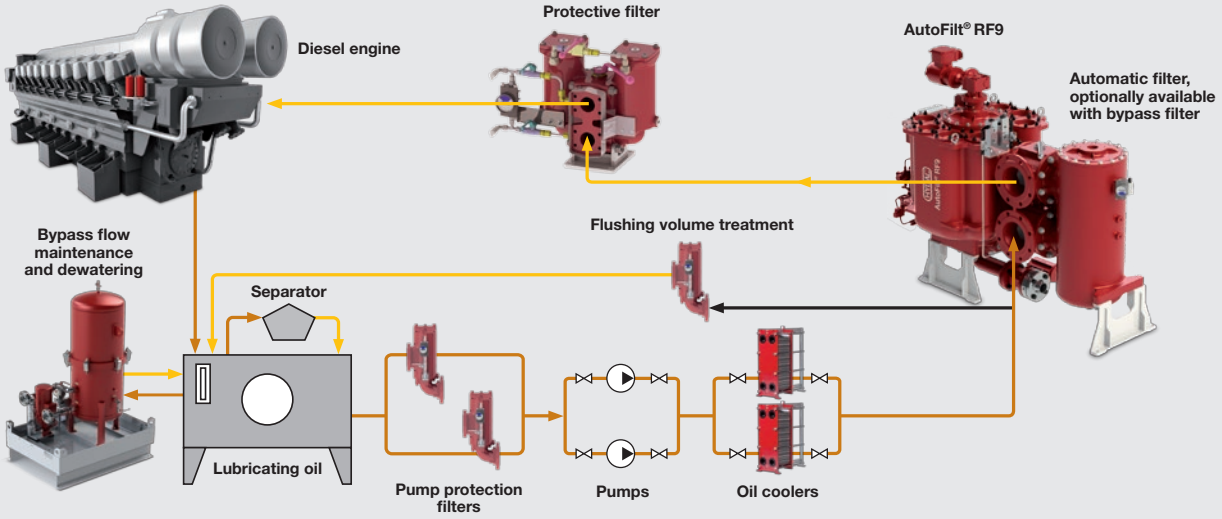

Fine filtration of cooling lubricants

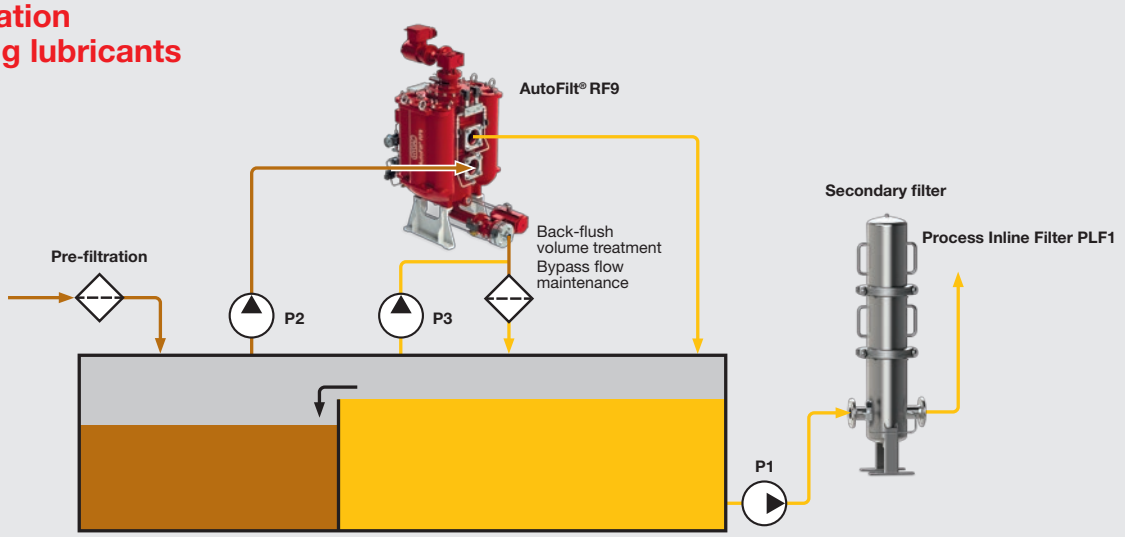

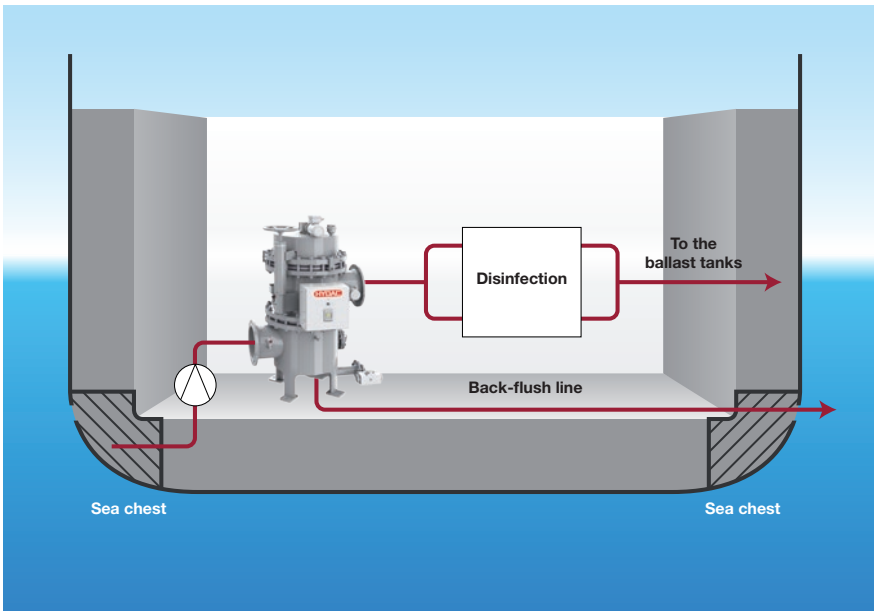

Ballast water

- Ballast water treatment
- Pre-filtration

HYDAC solutions:

- AutoFilt® RF3 / RF7 / RF10 / RF14

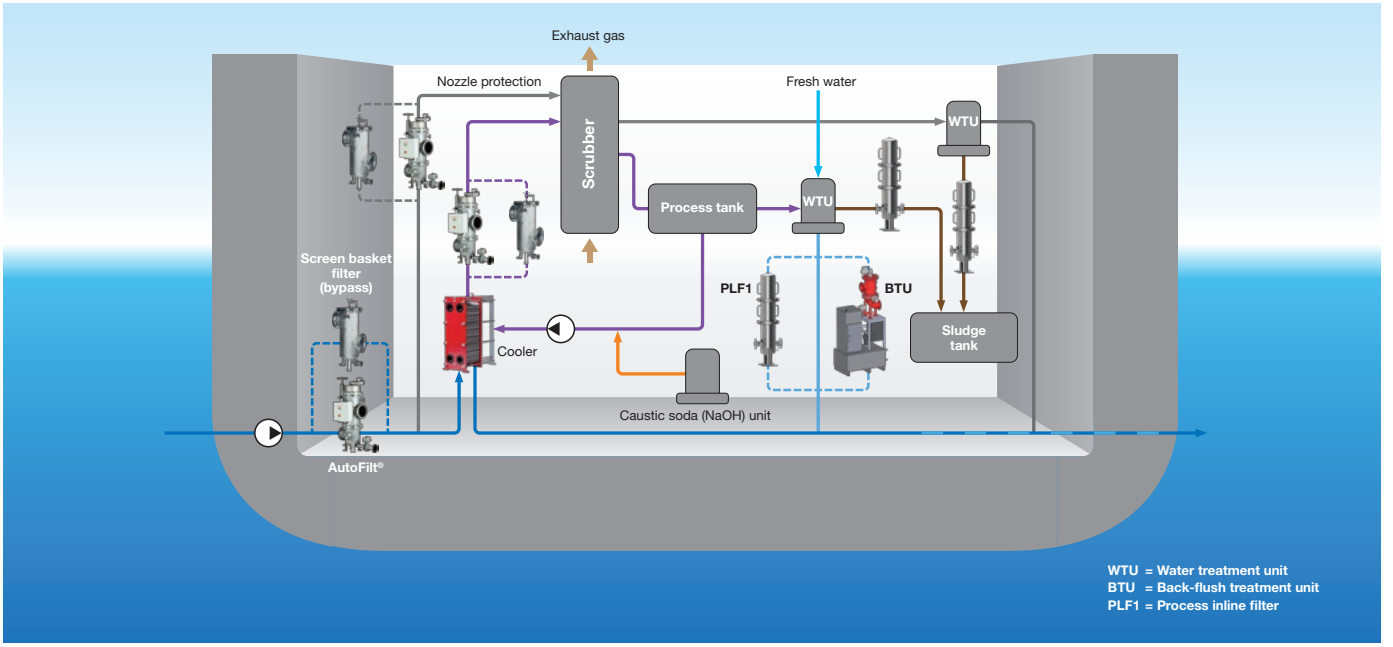

Exhaust Gas Treatment System ("EGTS" or "Scrubber")

- Nozzle protection
- Protection of the plate heat exchanger
- Washing water treatment of the closed circuit

HYDAC solutions:

- AutoFilt® RF3 / RF5 / RF7 / RF10
- Process Inline Filter PLF1
- PRFS
- BTU Back-Flush Treatment Unit
- Cooler

Process Filter Test-Cube

Filters, pre-tests, product training and service

Process Filter Test-Cube

- Insulated 40" High Cube
- Process area with integrated frequency-controlled pump
- Separate electric operating area

Filter test stations

- 2x DN 250
- 1x DN 80

The site

The test site is located on the premises of Kraeft GmbH Systemtechnik in Bremerhaven, part of the HYDAC company group and an industry and service expert in marine equipment, hydraulic steel structures, system engineering and much more.

With its favourable location at the Weser estuary, the site provides ideal test conditions with low tide influence.

Range of services

- Filter test bench
- Filter pre-tests for customers
- Customised system optimisation
- Service training

Accumulator Technology 30.000

Filter Technology 70.000

Process Technology 77.000

Filter Systems 79.000

Compact Hydraulics 53.000

Accessories 61.000

Electronics 180.000

Cooling Systems 57.000

Global Presence. Local Expertise. www.hydac.com

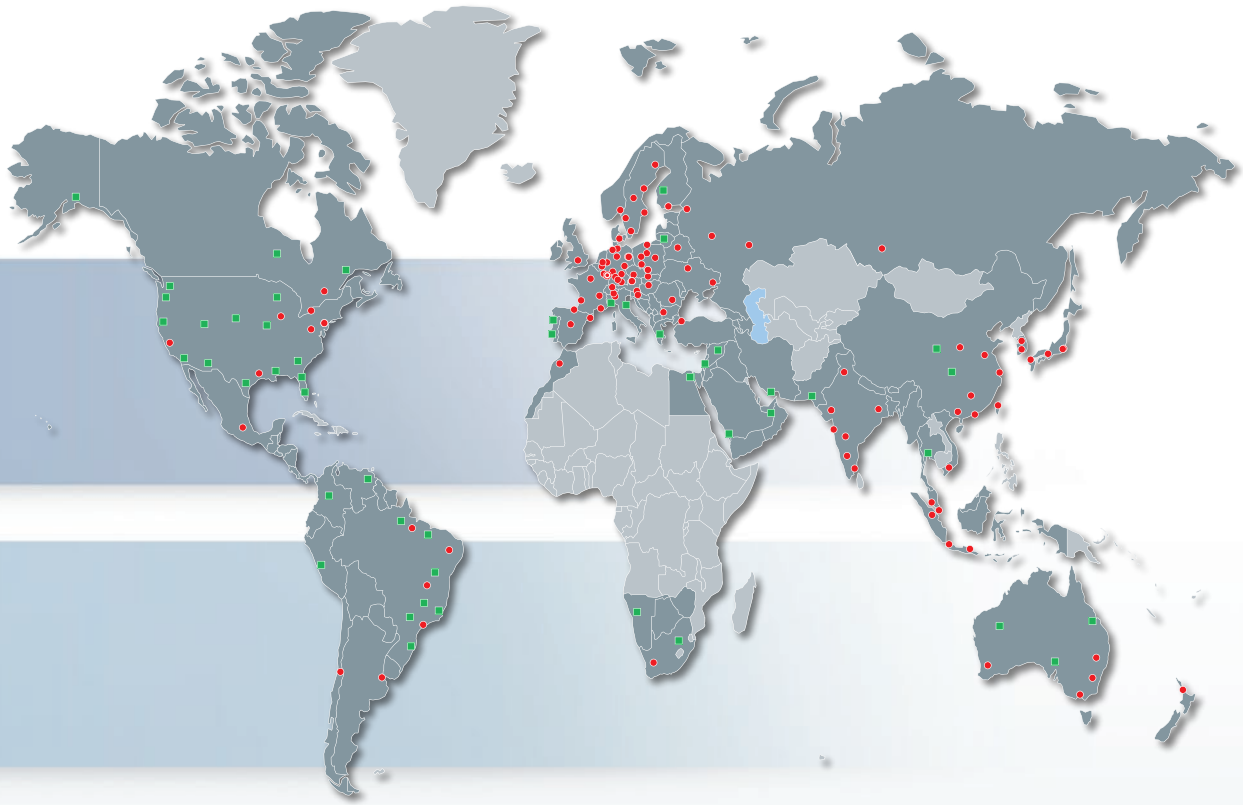

- HYDAC Head Office
- HYDAC Companies
- HYDAC Sales and Service Partners

HYDAC INTERNATIONAL

Head Office
HYDAC Process Technology GmbH

Industriegebiet Grube König
Am Wrangelflöz 1
66538 Neunkirchen
Germany

Tel.: +49 6897 509-1241
Fax: +49 6897 509-1278

E-mail: prozess-technik@hydac.com
Internet: www.hydac.com

EN 7.814.1/05.18